REV.	DESCRIPTION	DATE	DRAWN
A	New	14.06.2019	Cherry
B	update	29.07.2019	Ronny

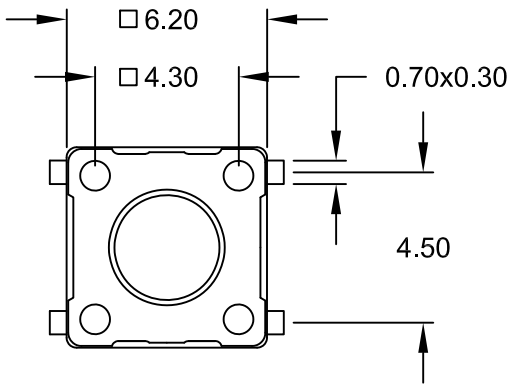

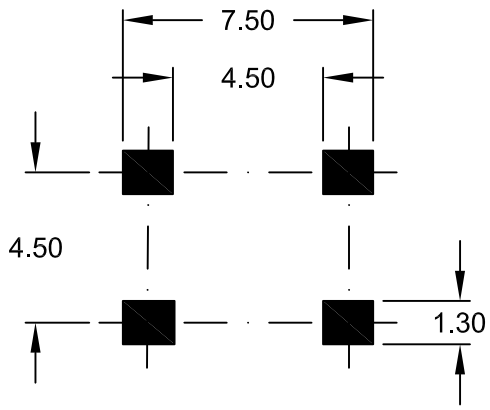

Recommended PCB Layout "Top View"
(Tolerance ±0.05)

Order Code

TSJ-602-xxRC/1SZ

Stem height Option ("**H**")

0.80 mm	**= 61**
1.50 mm	**= 62**
3.50 mm	**= 63**
3.80 mm	**= 48**
6.00 mm	**= 65**
9.50 mm	**= 66**

Specifications

Electrical

Current rating: 50mA, 12V DC
Insulation resistance: 100MΩ min.
Withstanding voltage: 250V AC (50Hz or 60Hz) 1Minute
Contact resistance: 100mΩ max.
Temperature range: -40°C to +85°C
Solder heat resistance: +255°C +0/-5°C
for 5 to 10 seconds
Operating force: 2.6N ±0.50N
Operating life: 500.000 cycles min.

Packing: Reel *(Tube on request)*

Circuit Diagram

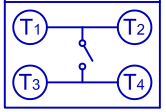

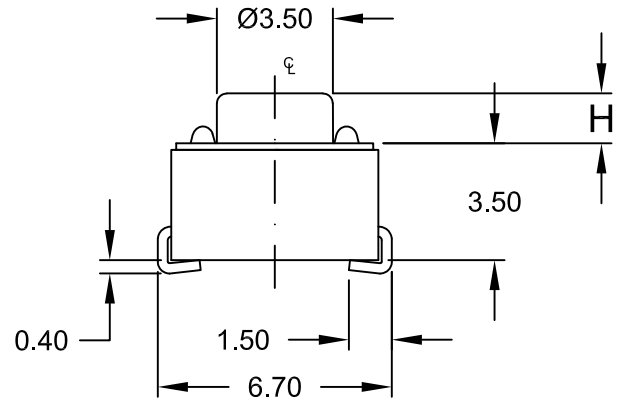

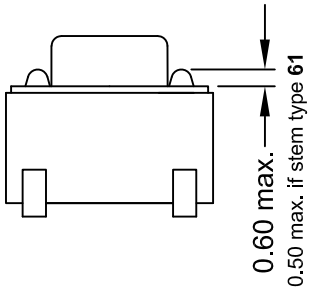

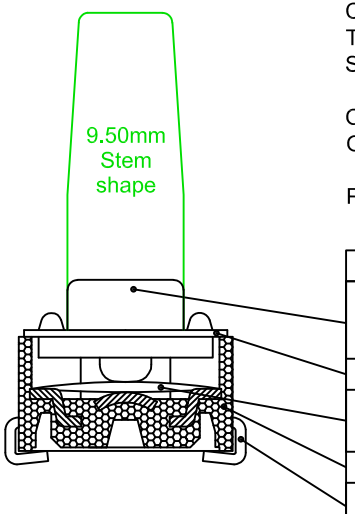

ITEM	DESC.	MATERIALS	TREATMENT
1	Stem	Nylon UL 94V-0	2.6N = red *(colour depend on operating force)*
2	Cover	Stainless Steel	none
3	Contact	Stainless Steel	with Silver cladding
4	Base	Nylon UL 94V-0	molded brown
5	Terminal	Brass	with Silver plating 0.5µm

RoHS compliant

E-tec 2019 © - all rights reserved www.e-tec.asia

E-tec Interconnect

UNIT	mm
SCALE	Free

GENERAL TOLERANCE	
X.° ±	X. ±
.X° ±	.X ±
.XX° ±	.XX ± 0.20
.XXX° ±	.XXX ±

DRAWN	Cherry	DATE	14.06.2019
CHECK	Ronny	DATE	29.07.2019
APPROVE	Fagi	DATE	29.07.2019

DWG. NO. TSJ-602-RC/1SZ — SHEET 1/1 — REV. B

SERIES NO. TSJ-602-xxRC/1SZ

Tactile Switch SMT 6x6

"J" - Leads 2.6N Type

NON-washable