E-tec Interconnect

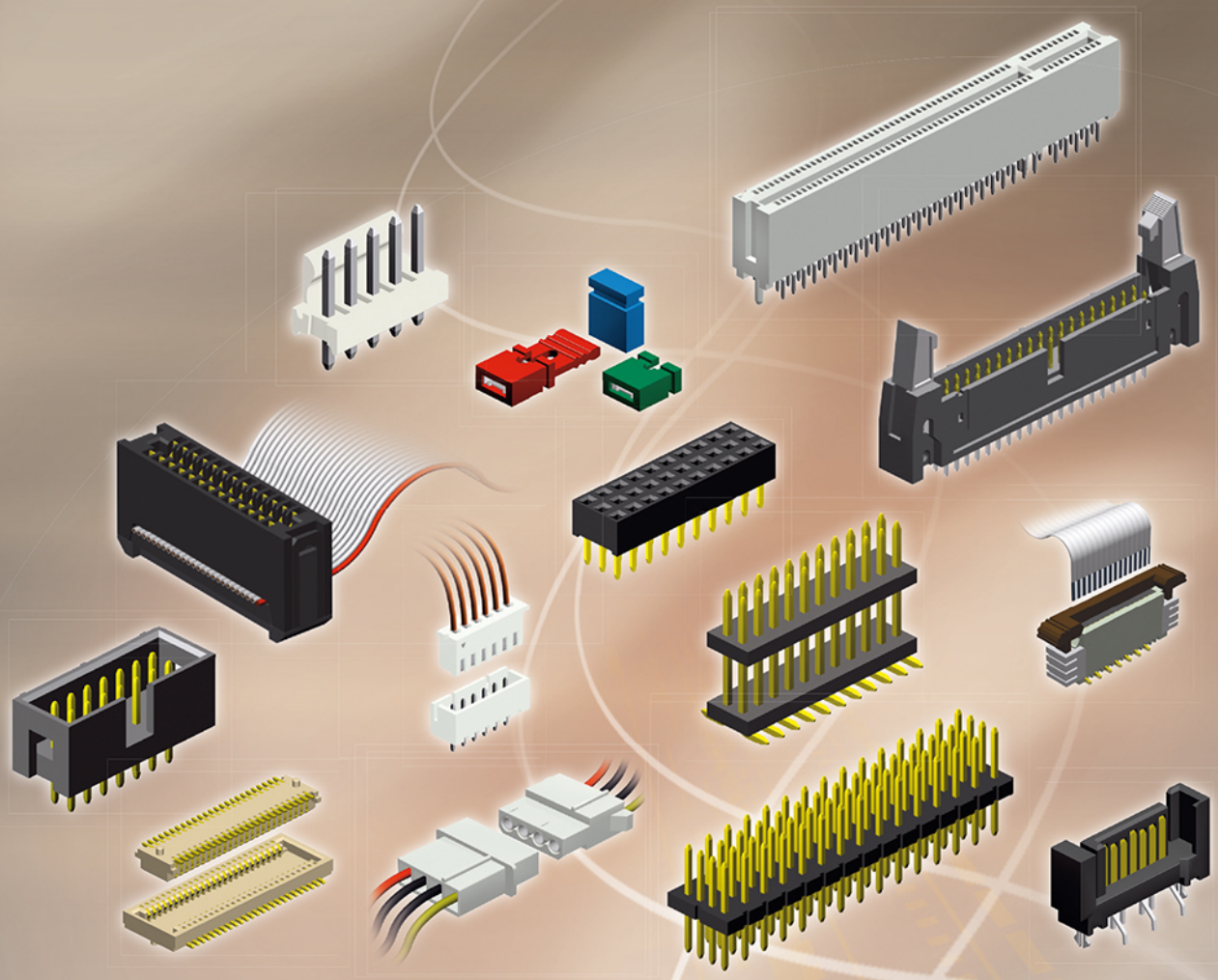

PCB INTERCONNECT PRODUCTS

07a

www.e-tec.asia

INDEX

E-tec Interconnect

Part-Number		Page
BB1 – 4 xx – S43 x – 55/2		52
BB1 – xxx – B850 – 55		73
BB1 – xxx – S50 x – 55		74
BB2 – x xx – S430 – 55/2		52
BB2 – xxx – B850 – 55		73
BB2 – xxx – S500 – 55		74
BE x – xxx – S xxx – 55		72
BE x – xxx – S8 xx – 55/2		50
BF x – xxx – S500 – 55		71
BF x – xxx – S680 – 55		71
BF x – xxx – S710 – 55		71
BF x – xxx – S850 – 55		71
BF1 – xxx – R500 – 55		71
BH x – xxx – R850 – 55		76
BH2 – xxx – R345 – 55/11		30
BH2 – xxx – R450 – 55/2		53
BL x – xxx – R842 – 55		69
BL x – xxx – S400 – 55/2		48
BL x – xxx – S430 – 55/2		48
BL x – xxx – S460 – 55/1		29
BL x – xxx – S570 – 55		70
BL x – xxx – S842 – 55		69
BL x – xxx – S850 – 55/1		29
BL x – xxx – SH635 – 55/2		49
BL1 – xxx – R430 – 55/2		48
BL1 – xxx – R570 – 55		70
BL2 – xxx – R430 – 55/11		28
BL2 – xxx – R720 – 55/2		48
BL x – xxx – RH635 – 55/2		49-1
BL2 – xxx – S340 – 55/11		28
BL2 – xxx – S430 – 55/11		28
BL4 – xxx – S630/x – 55/2		51
BS1 – xxx – B21x – 55/11 XX		35
BS1 – xxx – H43 x – 55/2 X		54
BS1 – xxx – H45 x – 55/11 XX		32
BS1 – xxx – H50 x – 55/X		77
BS1 – xxx – H75 x – 55/X		77
BS1 – xxx – R390 – 55/X		79
BS1 – xxx – T22 x – 55/11 XX		35
BS1 – xxx – TB22 – 55/2 X		55
BS2 – xxx – H222 – 55/00 X		14
BS2 – xxx – H360 – 55/11 X		34
BS2 – xxx – H36A – 55/11 X		34
BS2 – xxx – H430 – 55/2 X		54
BS2 – xxx – H450 – 55/11 X		33
BS2 – xxx – H45A – 55/11 X		33
BS2 – xxx – H45B – 55/11 X		33
BS2 – xxx – H45P – 55/11 X		33
BS2 – xxx – H500 – 55/X		77
BS2 – xxx – H600 – 55/1 X		31
BS2 – xxx – H750 – 55/X		77
BS2 – xxx – R345 – 55/11 X		37
BS2 – xxx – R390 – 55/X		79
BS2 – xxx – R500 – 55/2 X		57
BS2 – xxx – TB22 – 55/11 X		36
BS2 – xxx – TB22 – 55/2 X		56
BS2 – xxx – TB28 – 55/2 X		56
BS2 – xxx – TB365 – 55/X		78
BW2 – xxx – R850 – 55/P		75
BW2 – xxx – S850 – 55/P		75
CRF – 1 xx – D125		124
CRF – 1 xx – F254		129
CRF – 1 xx – H200		125
CRF – 1 xx – H254		129
CRF – 1 xx – I250		127
CRF – 1 xx – K150		124A
CRF – 1 xx – K200		126-1
CRF – 1 xx – L100		123
CRF – 1 xx – O200		125
CRF – 1 xx – P200		126-1
CRF – 1 xx – P250		128
CRF – 1 xx – R250		127
CRF – 1 xx – S125		124
CRF – 1 xx – S250		127
CRF – 1 xx – SH200		126-1
CRF – 1 xx – UT250		128
CRF – 2 xx – D200		126
CRF – 2 xx – H200		125
CRF – 2 xx – H254		129
CRF – 2 xx – H254/HP		129
CRF – 2 xx – L100		123
CRF – 999/27 – DP200 – 99		126 & 126-1
CRF – 999/27 – H254 – N5		129
CRF – 999/27 – I250 – 99		127
CRF – 999/27 – P250 – 99		128
CRF – 999/27 – S250 – 99		127
CRF – 999/27 – UT250 – 99		128
CRF – 999/28 – F254 – 99		129
CRF – 999/28 – R250 – 99		127
CRF – 999/29 – C200 – 99		126
CRF – 999/30 – K200 – 99		126-1
CRF – 999/30 – O200 – 99		125
CRF – 999/30 – SH200 – 99		126-1
CRF – 999/35 – D125 – 95		124
CRF – 999/35 – K150 – 99		124A
CRF – 999/35 – L100 – 99		123
CRF – 999/35 – S125 – 99		124
CRF – 999L/27 – H254 – 95		129
CRF – 999X/32 – H200 – 55		125
CRF – 1 xx – C200		126
CRR – 1 xx – F254 – 99		129
CRR – 1 xx – I250 – 99		127
CRR – 1 xx – K150 – 99		124A
CRR – 1 xx – O200 – 99		125
CRR – 1 xx – P200 – 99/P		126-1
CRR – 1 xx – P250 – 99		128
CRR – 1 xx – R250 – 99		127
CRR – 1 xx – S125 – 99		124
CRR – 1 xx – S250 – 99		127
CRR – 1 xx – SD125 – 99/R		124
CRR – 1 xx – SH200 – 99/X		126-1
CRR – 1 xx – SK150 – 99/R		124A
CRR – 1 xx – SK200 – 99/X		126-1
CRR – 1 xx – SL100 – 99/R		123
CRR – 1 xx – SS125 – 99/R		124
CRR – 1 xx – UT250 – 99		128
CRR – 1 xx – C200 – 99		126
CRR – 2 xx – SL100 – 99/R		123
CRR – 2 xx – D200 – 99		126
CRS – 1 xx – F254 – 99		129
CRS – 1 xx – I250 – 99		127
CRS – 1 xx – K150 – 99		124A
CRS – 1 xx – O200 – 99		125
CRS – 1 xx – P200 – 99/P		126-1
CRS – 1 xx – P250 – 99		128
CRS – 1 xx – R250 – 99		127
CRS – 1 xx – S125 – 99		124
CRS – 1 xx – S250 – 99		127
CRS – 1 xx – SH200 – 99/X		126-1
CRS – 1 xx – SK150 – 99/B		124A
CRS – 1 xx – SL100 – 99/B		123
CRS – 1 xx – SP250 – 99/X		128
CRS – 1 xx – SS125 – 99/X		124
CRS – 1 xx – UT250 – 99		128
CRS – 1 xx – C200 – 99		126
CRS – 1 xx – SC200 – 99/x		126
CRS – 2 xx – SL100 – 99/E		123
CRS – 2 xx – D200 – 99		126
DHL – xxx – R100 – 55		81
DHL – xxx – S100 – 55		81
DHS – xxx – R100 – 55		81
DHS – xxx – S100 – 55		81
DHW – xxx – R100 – 55		81
DHW – xxx – S100 – 55		81
ECC – 120 – P050 – 95		87
ECC – 184 – P053 – 95		87
ECC – 184 – P055 – 95		87
ECC – xxx – RC100 – 95		89A
ECC – xxx – S050 – 95/x		88
ECC – xxx – SC100 – 95		89A
ECC – xxx/X – R100 – 95		89
ECC – xxx/X – S100 – 95		89
FCA – x xx – X xxx – xxxxxx – x		113
FCL – xxx – H100 – 99/x		104
FCL – xxx – H125 – 99/X		107
FCL – xxx – R100 – 99	OBSOLETE	106
FCL – xxx – R125 – 99	OBSOLETE	109
FCL – xxx – S100 – 99	OBSOLETE	105
FCL – xxx – S125 – 99	OBSOLETE	108
FCL – xxx – V100 – 99/xx		103
FCT – x xx – C xxx – xx		114
FCT – x xx – S xxx – xx		114
FCT – x xx – T xxx – xx		114
FCZ – xxx – H050 – 99/x	EOL / Replacement	92
FCZ – xxx – H051 – 99/x	EOL / Replacement	92
FCZ – xxx – HC50 – 99/x		92
FCZ – xxx – HC51 – 99/x		92
FCZ – xxx – H052 – 99/x	OBSOLETE	94
FCZ – xxx – H053 – 99/x	OBSOLETE	94
FCZ – xxx – H058 – 99/x		95
FCZ – xxx – H080 – 99	OBSOLETE	96
FCZ – xxx – H081 – 99	OBSOLETE	96
FCZ – xxx – H100 – 99/x	EOL / Replacement	98
FCZ – xxx – H101 – 99/x	EOL / Replacement	98
FCZ – xxx – H102 – 99/x		98
FCZ – xxx – H103 – 99/x		98
FCZ – xxx – H115 – 99/x	OBSOLETE	100
FCZ – xxx – H116 – 99/x	OBSOLETE	100
FCZ – xxx – R100 – 99	EOL / Replacement	102
FCZ – xxx – R101 – 99	EOL / Replacement	102
FCZ – xxx – R125 – 99	OBSOLETE	110
FCZ – xxx – RL100 – 99		102
FCZ – xxx – RL101 – 99		102
FCZ – xxx – S100 – 99	EOL / Replacement	101
FCZ – xxx – S125 – 99	OBSOLETE	110
FCZ – xxx – SL100 – 99		101
FCZ – xxx – SR100 – 99	EOL / Replacement	101
FCZ – xxx – V050 – 99/xx	EOL / Replacement	91
FCZ – xxx – VC50 – 99/xx		91
FCZ – xxx – VC51 – 99/xx		91
FCZ – xxx – V052 – 99/xx	OBSOLETE	93
FCZ – xxx – V053 – 99/xx	OBSOLETE	93
FCZ – xxx – V100 – 99/xx	EOL / Replacement	97
FCZ – xxx – VZ100 – 99/xx		97
FCZ – xxx – V115 – 99/xx	OBSOLETE	99
FPC – xxx – R254 – 99		112
FPC – xxx – S254 – 99		111
IDC – xxx – S100 – N5		90
IDC – xxx – W100 – N5		90
IDD – xxx – L100 – 95		82
IDD – xxx – LE100 – N5		82
IDD – xxx – S100 – N5		82
IDD – xxx – SE100 – N5		82
IDF – 1 xx/X – P396 – 99		131
IDF – 1 xx/X – PC396 – 99		131
IDH – xxx – E100 – N5		82
IDH – xxx – ES100 – N5		82
IDH – xxx – W100 – N5		82
IDH – xxx – WS100 – N5		82
IDP – xxx – S100 – N5		85
IDP – xxx – S200 – N5		84
IDP – xxx – S300 – N5		85
IDP – xxx – S600 – N5		85
IDP – xxx – T050 – 99		86
IDS – xxx – S100 – N5/X		80
IDS – xxx – S200 – N5/X		58
IDS – xxx – W050 – 55/ X		38
IDS – xxx – W100 – N5/X		80
IDS – xxx – W200 – N5/X		58
JPC – 127 – BL – 55		83
JPC – 200 – BL – 55		83
JPC – 254 – XX – 55		83
JPC – 508 – BL – 55		83
JPE – 200 – XX – 55		83
JPE – 254 – XX – 55		83
JPH – 200 – XX – 55		83
JPH – 254 – XX – 55		83
JPM – xx – 200 – BL – 55		83
JPM – xx – 254 – BL – 55		83
JPW – 102 – 55		83
JPW – 254 – 55		83
JPW – 508 – 55		83
JPW – 762 – 55		83
MFM – xxx – DC50 – 99		115
MFP – xxx – DC50 – 99		116
MMF – xxx – RB50 – 99		121
MMF – xxx – RL50 – 99		121A
MMF – xxx – SB50 – 99		119
MMF – xxx – SL50 – 99		120
MMF – xxx –HB50 – 99/X		117
MMF – xxx –HL50 – 99/X		118
MMM – xxx – HS50 – 99/X		122A
MMM – xxx – SS50 – 99		122
PCC – 1 xx – PM635/x		136
PCC – 3 xx – P635/x		136-1
PCF – 1 xx – F396		131
PCF – 1 xx – F508		134
PCF – 1 xx – P420		132
PCF – 1 xx – P508		134
PCF – 1 xx – P635/x		136
PCF – 1 xx – Q396		131
PCF – 1 xx – W300		130
PCF – 104 – I508 – 99/X		134
PCF – 2 xx – BSC420 – 99		133-2
PCF – 2 xx – P420		133

INDEX

Part-Number	Page
PCF – 2 xx – W300	130-2
PCF – 3 xx – P635/x	136-1
PCF – 999/20 – F396 – 99	131
PCF – 999/20 – F508 – 99	134
PCF – 999/xx – P508 – 99	134
PCF – 999/xx – P635 – 99	136 & 136-1
PCF – 999/xx – Q396 – 99	131
PCF – 999/xxX – P420 – 99	132 & 133
PCF – 999X/xxX – W300 – 99	130 & 130-2
PCM – 1 xx – C508	134
PCM – 1 xx – P420	133-1
PCM – 1 xx – PN420	133-1
PCM – 1 xx – W300	130-1
PCM – 1 xx – WN300	130-1
PCM – 2 xx – BC420	133-2
PCM – 2 xx – P420	133-1
PCM – 2 xx – PN420	133-1
PCM – 2 xx – W300	130-3
PCM – 2 xx – WN300	130-3
PCM – 999/19 – C508 – 99	134
PCM – 999/xx – W300 – 99	130-1 & 130-3
PCM – 999/xxX – P420 – 99	133-1 & 133-2
PCM – 999X/xx – P635 – 99	136 & 136-1
PCR – 1 xx – A420 – 99	132
PCR – 1 xx – F396 – 99	131
PCR – 1 xx – F508 – 99	134
PCR – 1 xx – P396 – 99	131
PCR – 1 xx – P420 – 99	132
PCR – 1 xx – PWF635 – 99	136
PCR – 1 xx – PWM635 – 99	136
PCR – 1 xx – Q396 – 99	131
PCR – 1 xx – SC300 – 99/X	130-1
PCR – 1 xx – SW300 – 99/R	130-1
PCR – 1 xx – W300 – 99	130-1
PCR – 1 xx – W420 – 99	132
PCR – 1 xx – WC300 – 99/X	130-1
PCR – 104 – T508 – 99 OBSOLETE	135
PCR – 2 xx – BM420 – 99	133-2
PCR – 2 xx – P420 – 99	133
PCR – 2 xx – SC300 – 99/XX	130-3
PCR – 2 xx – SW300 – 99/R	130-3
PCR – 2 xx – W300 – 99	130-2
PCR – 2 xx – W420 – 99	133
PCR – 2 xx –BF300 – 99	130-4
PCR – 2 xx –BM300 – 99	130-4
PCS – 1 xx – F396 – 99	131
PCS – 1 xx – F508 – 99	134
PCS – 1 xx – P396 – 99	131
PCS – 1 xx – P420 – 99	132
PCS – 1 xx – PF635 – 99	136
PCS – 1 xx – PM635 – 99	136
PCS – 1 xx – PN420 – 99	132
PCS – 1 xx – Q396 – 99	131
PCS – 1 xx – SC300 – 99/XX	130
PCS – 1 xx – SW300 – 99/B	130
PCS – 1 xx – W300 – 99	130
PCS – 1 xx – WC300 – 99	130
PCS – 104 – T508 – 99 OBSOLETE	135
PCS – 2 xx – BF420 – 99	133-2
PCS – 2 xx – BM420 – 99	133-2
PCS – 2 xx – P420 – 99	133
PCS – 2 xx – PN420 – 99	133
PCS – 2 xx – SC300 – 99/XX	130
PCS – 2 xx – SC300 – 99/XX	130-2
PCS – 2 xx – SW300 – 99/B	130-2
PCS – 2 xx – W300 – 99	130-2
PCS – 2 xx –BF300 – 99	130-4
PCS – 2 xx –BM300 – 99	130-4
PCS – 3 xx – PF635 – 99/X	136-1
PCS – 3 xx – PM635 – 99/X	136-1
SE2 – xxx – R430 – xx /2	40
SE2 – xxx – R635 – 55	61
SE2 – xxx – S400 – xx /2	40
SE2 – xxx – S740 – 55	61
SL1 – xxx – B096/xx – xx /2	39
SL1 – xxx – Bxxx/x – 55/11	15
SL1 – xxx – K106/xx – xx /2	39
SL1 – xxx – N088/xx – xx /2	39
SL1 – xxx – R xxx/xx – xx	60
SL1 – xxx – R071/x – 55/11	17
SL1 – xxx – R106/xx – xx /2	39
SL1 – xxx – RH xxx/xx – xx	60
SL1 – xxx – S xxx/xx – 55/1	19
SL1 – xxx – S xxx/xx – xx	59
SL1 – xxx – S088/xx – xx /2	39
SL1 – xxx – SH xxx/xx – xx	59
SL1 – xxx – U xxx/xx – xx	60
SL1 – xxx – UH xxx/xx – xx	60
SL2 – xxx – B096/xx – xx /2	39
SL2 – xxx – K106/xx – xx /2	39
SL2 – xxx – N088/xx – xx /2	39
SL2 – xxx – R xxx/xx – xx	60
SL2 – xxx – R071/x – 55/11	17
SL2 – xxx – R106/xx – xx /2	39
SL2 – xxx – RH xxx/xx – xx	60
SL2 – xxx – S xxx/xx – 55/1	19
SL2 – xxx – S xxx/xx – xx	59
SL2 – xxx – S088/xx – xx /2	39
SL2 – xxx – SH xxx/xx – xx	59
SL2 – xxx – Sxxx/x – 55/00	11
SL2 – xxx – Sxxx/x – 55/11	16
SL2 – xxx – U xxx/xx – xx	60
SL2 – xxx – UH xxx/xx – xx	60
SL3 – xxx – R xxx/xx – xx	60
SL3 – xxx – RH xxx/xx – xx	60
SL3 – xxx – S xxx/xx – xx	59
SL3 – xxx – SH xxx/xx – xx	59
SL3 – xxx – U xxx/xx – xx	60
SL3 – xxx – UH xxx/xx – xx	60
SL4 – xxx – S830/x – 55/2	41
SLS – xxx – D xxx – 55	66
SLS – xxx – D762/xx – 55/2	46
SLS – xxx – H510 – 55/11 X	27
SLS – xxx – H562 – 55/2 X	47
SLS – xxx – H610 – 55/11 X	26
SLS – xxx – H885 – 55/X	67
SLS – xxx – HP2x – 55/11 X	26
SLS – xxx – P535/x – 55/11	24
SLS – xxx – R103 – 55/X	68
SLS – xxx – R510 – 55/11	27
SLS – xxx – R562 – 55/2	46
SLS – xxx – R565/x – 55/11	25
SLS – xxx – R920 – 55	66
SLS – xxx – S103 – 55/X	68
SLS – xxx – S510 – 55/11	27
SLS – xxx – S535 – 55/11	24
SLS – xxx – S562 – 55/2	46
SLS – xxx – S920 – 55	66
SP x – xxx – S xxx/xx – xx	62
SP x – xxx – SH xxx/xx – xx	62
SP1 – xxx – N xxx/xx – 55/2	42
SP1 – xxx – S xxx/x – 55/11	18
SP1 – xxx – S xxx/xx – 55/1	19
SP1 – xxx – S xxx/xx – 55/2	42
SP2 – xxx – HX065/x – 55/2 X	44
SPx – xxx – H16x/xx – 55 X	64
SP2 – xxx – H220/x – 55/1 X	23
SP2 – xxx – H51/x – 55/00 X	13
SP2 – xxx – H xx/x – 55/11 X	21
SP2 – xxx – N xxx/xx – 55/2	42
SP2 – xxx – S xxx/x – 55/11	18
SP2 – xxx – S xxx/xx – 55/1	19
SP2 – xxx – S xxx/xx – 55/2	42
SR1 – xxx – H093/x – 55/2 X	45
SR1 – xxx – H135/xx – xx X	65
SR2 – xxx – H122/x – 55/2 X	45
SR2 – xxx – H135/xx – xx X	65
SS1 – xxx – H085/x – 55/2 X	43
SS1 – xxx – H14 x /xx – 55 X	63
SS1 – xxx – H185/x – 55/2 X	43
SS1 – xxx – H38 x /x – 55/1 X	22
SS1 – xxx – TH14 x /xx – 55 X	63
SS2 – xxx – HX064/x – 55/2 X	44
SS2 – xxx – H085/x – 55/2 X	43
SS2 – xxx – H140/xx – 55 X	63
SS2 – xxx – H18/x – 55/00 X	12
SS2 – xxx – H380/x – 55/1 X	22
SS2 – xxx – H7x/x – 55/11 X	20
SS2 – xxx – TH140/xx – 55 X	63

General information concerning the E-tec interconnect products

*E-tec **SMT** connectors, male or female, are offered with a coplanarity of max. 0.10mm*
They are adapted to all modern SMT soldering process and they can be handled easily with all currently existing placing techniques.
Customers may choose between various packaging options, such as Tray, Tube and Reel.

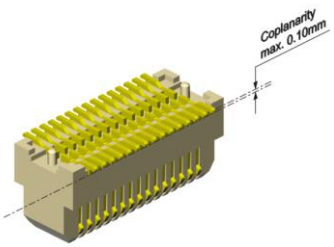

Tolerances:
All dimensions shown in this catalog represent average values. For precise +/- tolerance values please request a specific product datasheet. All pin header dimensions "A" have a general tolerance of +/- 0.25mm, unless otherwise indicated.

Plating:
-99 *= Standard Tin plating over Nickel*
-55 *= Standard Gold plating over Nickel*
-95 *= Standard selective Tin/Gold plating over Nickel*
Other platings are offered on request

Specifications:
The data contained in this catalog is of general nature and refers to standard products. For example a „Current rating" at an ambient temperature of 25°C reflects the value per individual contact. Should you require any further data or test reports, you can obtain this information from your nearest E-tec sales office.
The E-tec connectors conform with signal integrity requirements at high data and frequency rates. However we cannot offer a general information about the max. frequency or data transmission rate. For such a statement, it would require more information about the chosen configuration and pin-out, the length of the cable and/or any other specific requirements regarding the application itself and its related signal integrity.

GENERAL POLICY

All information contained in this catalog, including illustrations, specifications and dimensions are accurate to the best of our knowledge, and reflect the status as at the date of publication. Due to technical progress, it is subject to change without notice. Application information is informational in nature and shall not be construed to warrant suitability of products for any particular purpose as performance may vary depending on the conditions to which a product is subjected. Unless otherwise confirmed at the time of order, all E-tec products are non cancellable and non returnable items (NCNR). E-tec products are warranted for 30 days and the warranty is limited strictly to replacement of products. This warranty does not cover any claims for natural wear and tear, nor for any compensation, such as loss of production, loss of use, loss of orders, loss of profit, nor any other direct or indirect damages.

Fine Pitch Plug-Board Connectors

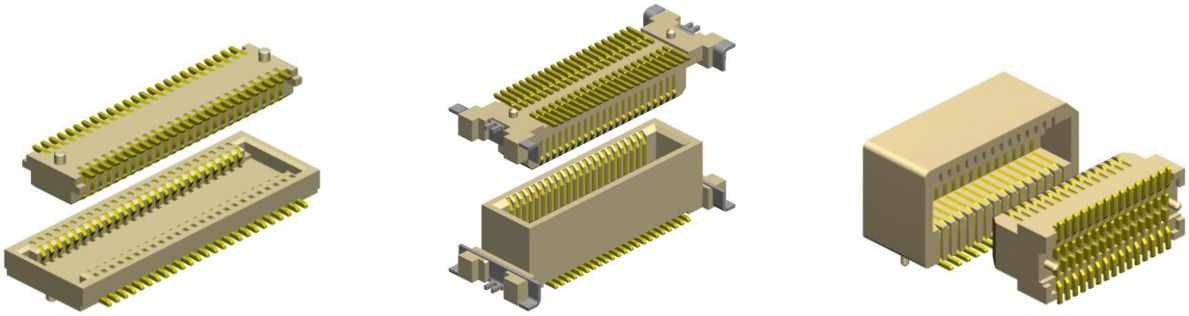

0.50mm - 0.60mm - 0.80mm pitch: Page 9

Board to Board & Wire to Board Connectors

PIN HEADER

Straight

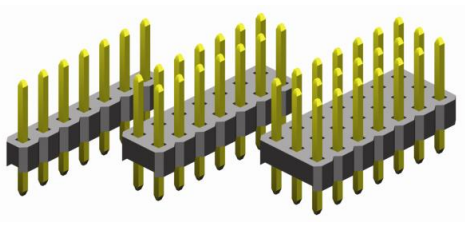

1.00mm pitch: Page 11
1.27mm pitch: Page 15, 16 & 19
2.00mm pitch: Page 39
2.54mm pitch: Page 59

Right Angle

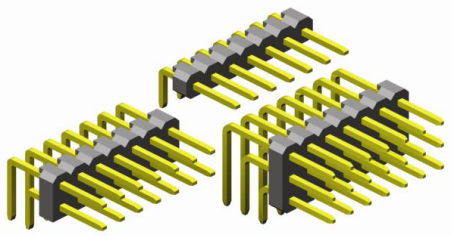

1.27mm pitch: Page 17
2.00mm pitch: Page 39
2.54mm pitch: Page 60

Double Plastic Board Spacer

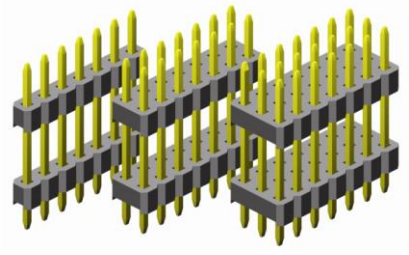

1.27mm pitch: Page 18 & 19
2.00mm pitch: Page 42
2.54mm pitch: Page 62

PC 104 Type

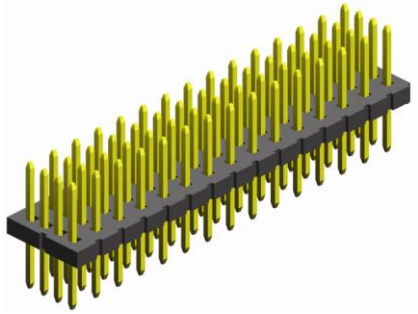

2.00mm pitch: Page 41

High Base “Board To Board”

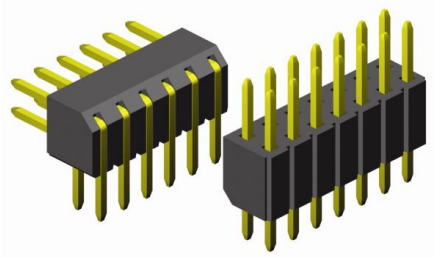

2.00mm pitch: Page 40
2.54mm pitch: Page 61

SMT straight

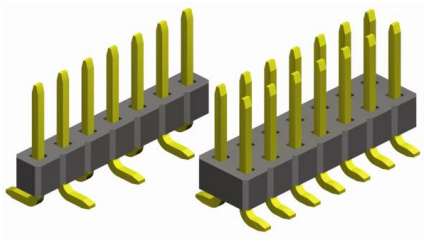

1.00mm pitch: Page 12
1.27mm pitch: Page 20 & 22
2.00mm pitch: Page 43 & 44
2.54mm pitch: Page 63

SMT Double Plastic Board Spacer

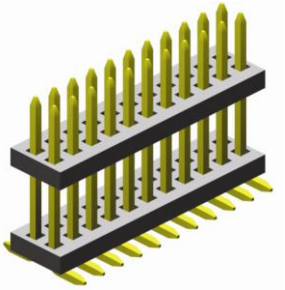

1.00mm pitch: Page 13
1.27mm pitch: Page 21 & 23
2.00mm pitch: Page 44
2.54mm pitch: Page 64

SMT “slanted”

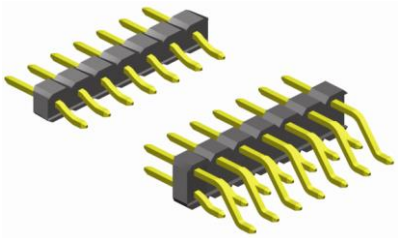

2.00mm pitch: Page 45
2.54mm pitch: Page 65

Jumper & Shorting Links

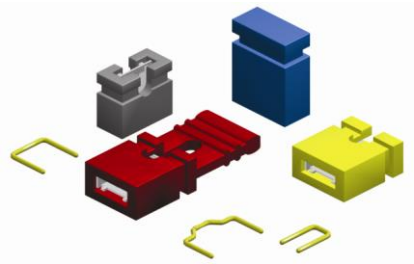

1.27mm pitch: Page 83
2.00mm pitch: Page 83
2.54mm pitch: Page 83
5.08mm pitch: Page 83

BOX HEADER

Straight Box Header

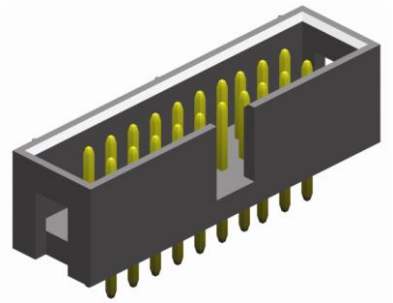

1.27mm pitch:	**Page**	**24 & 27**
2.00mm pitch:	**Page**	**46**
2.54mm pitch:	**Page**	**66**

Right Angle Box Header

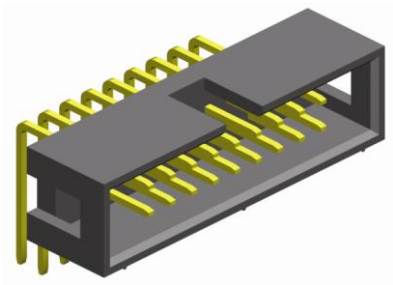

1.27mm pitch:	**Page**	**25 & 27**
2.00mm pitch:	**Page**	**46**
2.54mm pitch:	**Page**	**66**

SMT Box Header

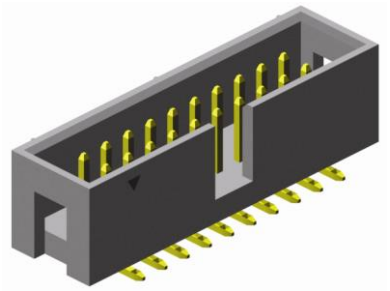

1.27mm pitch:	**Page**	**26 & 27**
2.00mm pitch:	**Page**	**47**
2.54mm pitch:	**Page**	**67**

Box Header
with metal ejection latches
straight & right angle

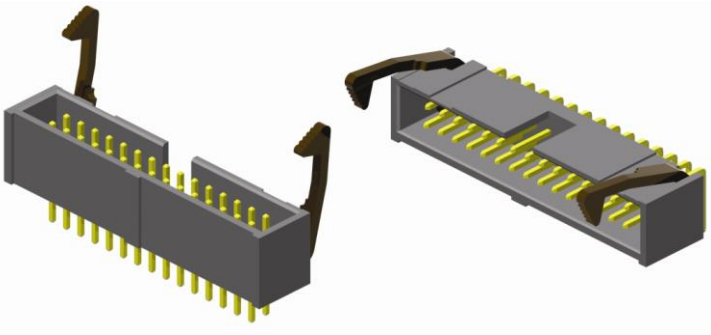

2.54mm pitch: **Page** **68**

Box- & DIN 41 651 HEADER
with plastic ejection latches
straight & right angle

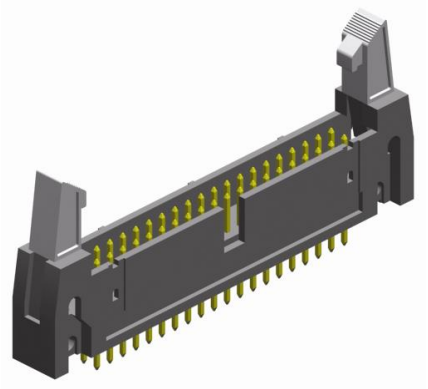

2.54mm pitch: **Page** **81**

Mini – Flex Connectors
IDC Type for Ribbon Cable UL Style 2651

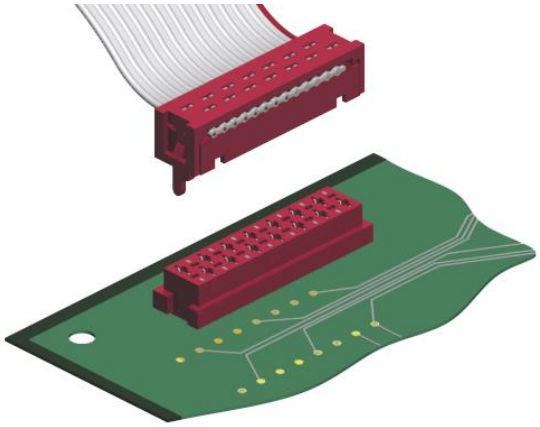

1.27mm pitch: **Page** **115 & 116**

Mini – Mate Connectors
SMT & THT Type

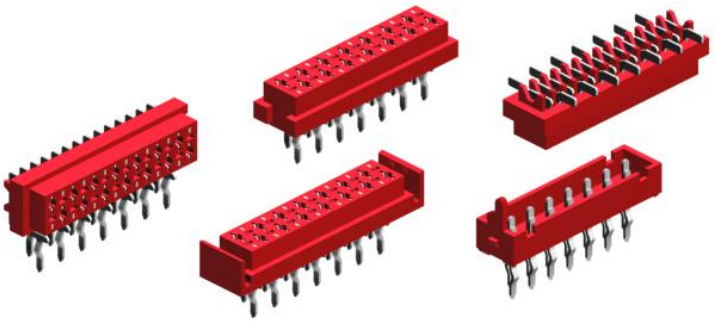

1.27mm pitch: **Page** **117 to 122A**

FEMALE HEADERS

Straight Types single & dual row

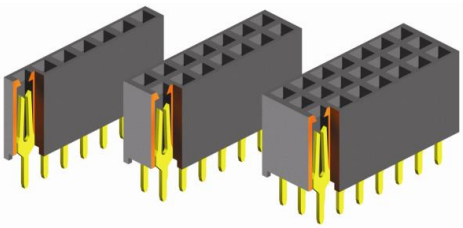

1.27mm pitch:	**Page**	**28 & 29**
2.00mm pitch:	**Page**	**48 & 49**
2.54mm pitch:	**Page**	**69 to 71**

Right Angle Types

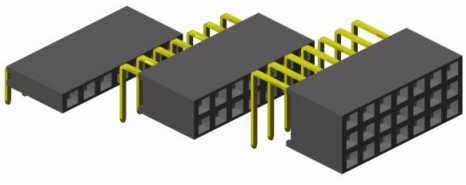

1.27mm pitch:	**Page**	**28**
2.00mm pitch:	**Page**	**48 & 49-1**
2.54mm pitch:	**Page**	**69 to 71**

SMT “standard profile” Types

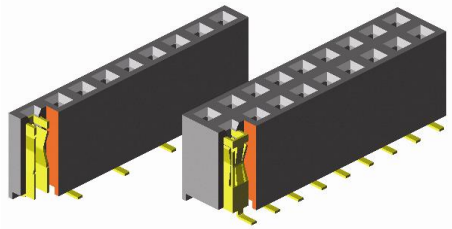

1.27mm pitch:	**Page**	**31 to 33**
2.00mm pitch:	**Page**	**54**
2.54mm pitch:	**Page**	**77**

PC 104+ Type

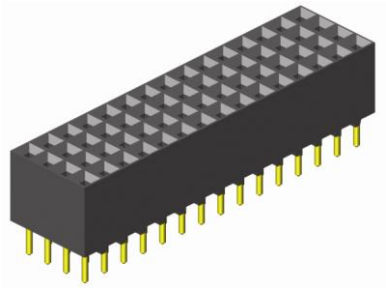

2.00mm pitch:	**Page**	**51**

Elevated Types

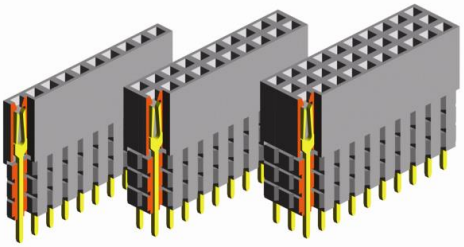

2.00mm pitch:	**Page**	**50**
2.54mm pitch:	**Page**	**72**

SMT “low profile” Types

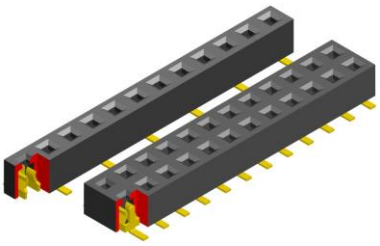

1.00mm pitch:	**Page**	**14**
1.27mm pitch:	**Page**	**34 to 36**
2.00mm pitch:	**Page**	**55 & 56**
2.54mm pitch:	**Page**	**78**

Dual Entry Types “low profile”

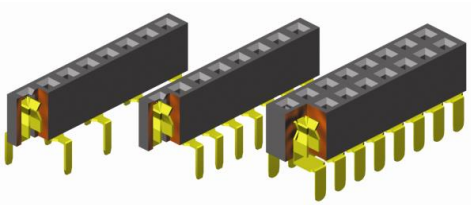

2.00mm pitch:	**Page**	**52**
2.54mm pitch:	**Page**	**74**

Dual Entry Type “standard profile”

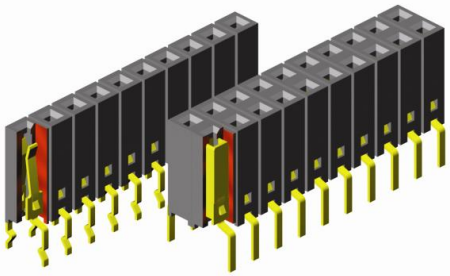

2.54mm pitch:	**Page**	**73**

Shrouded Mating Types

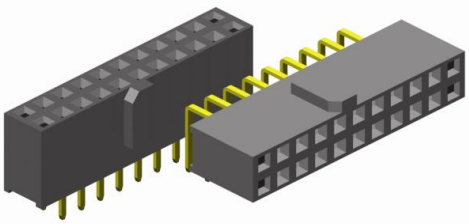

2.54mm pitch:	**Page**	**75**

Through Hole (THT) Side Entry Types

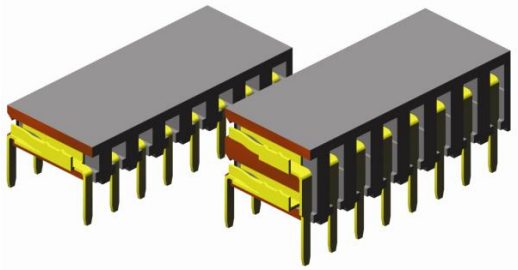

1.27mm pitch:	**Page**	**30**
2.00mm pitch:	**Page**	**53**
2.54mm pitch:	**Page**	**76**

SMT Side Entry Types

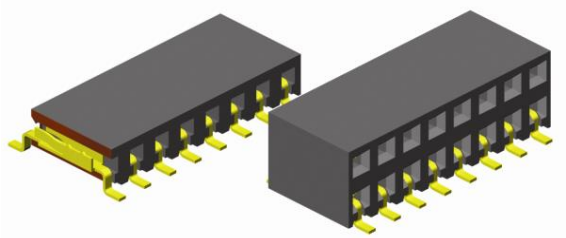

1.27mm pitch:	**Page**	**37**
2.00mm pitch:	**Page**	**57**
2.54mm pitch:	**Page**	**79**

IDC CONNECTORS

IDC Female Headers

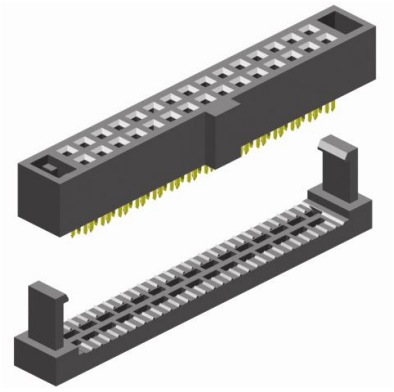

1.27mm pitch: Page 38
2.00mm pitch: Page 58
2.54mm pitch: Page 80

DIP Plugs

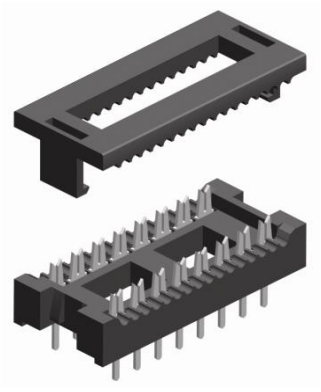

2.00mm x 2.00mm
IDC pitch 1.00mm: **Page 84**
2.54mm
IDC pitch 1.27mm: **Page 85**

Transition Connectors

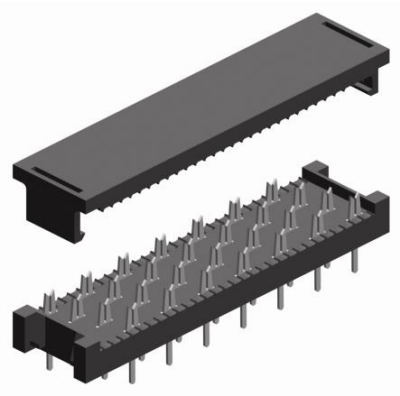

2.54mm
IDC pitch 1.27mm: **Page 86**

IDC Box Headers

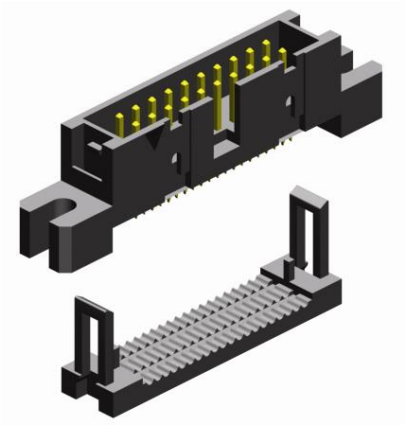

2.54mm pitch: Page 82

IDC DIN Headers DIN 41 651

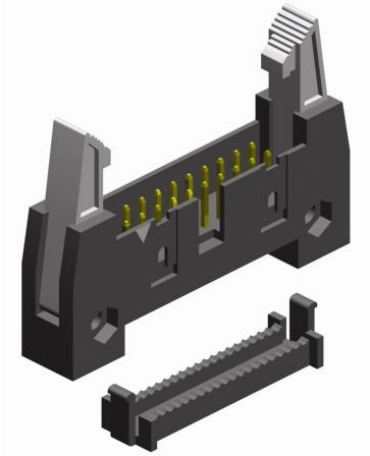

2.54mm pitch: Page 82

IDC Card Edge Connectors

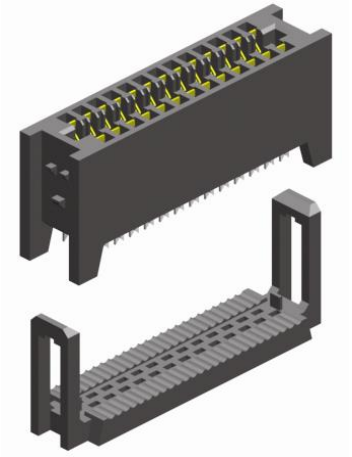

2.54mm pitch: Page 90

CARD EDGE CONNECTORS

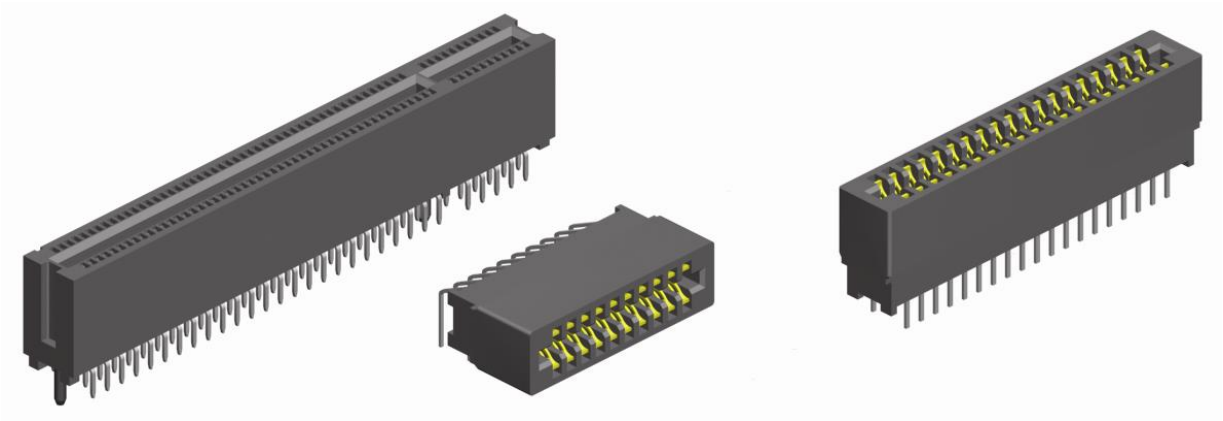

PCI	**1.27mm pitch :**	**Page**	**87**
Card Edge	**1.27mm pitch :**	**Page**	**88**
Card Edge	**2.54mm pitch :**	**Page**	**89 & 89A**

FPC/FFC CONNECTORS

ZIF SMT FPC Type vertical

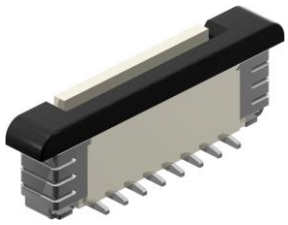

0.50mm pitch: Page 91

1.00mm pitch: Page 97

ZIF SMT FPC Type horizontal

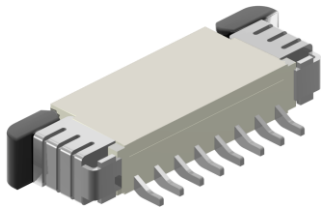

0.50mm pitch: Page 92
0.80mm pitch: on request
1.00mm pitch: Page 98

ZIF SMT FPC Type horizontal
"Easy-on" Type

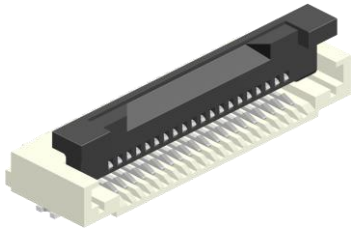

0.50mm pitch: Page 95

ZIF THT FPC Type straight

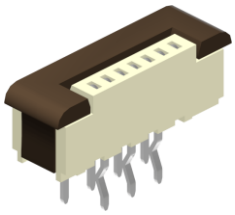

1.00mm pitch: Page 101
1.25mm pitch: Page 110

ZIF THT FPC Type right angle

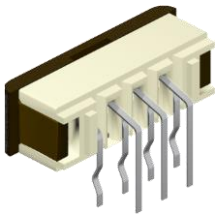

1.00mm pitch: Page 102

LIF SMT FPC/FFC Type vertical

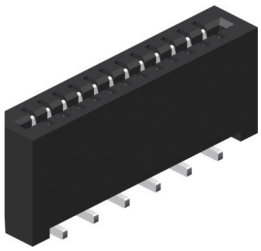

1.00mm pitch: Page 103

LIF SMT FPC/FFC Type horizontal

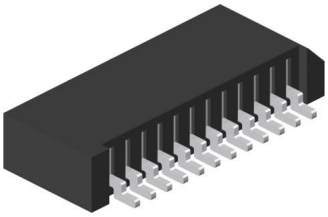

1.00mm pitch: Page 104
1.25mm pitch: Page 107

LIF THT FPC/FFC Type straight

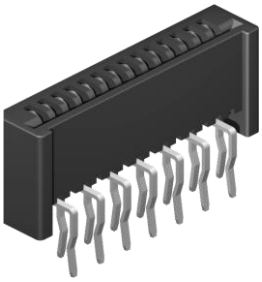

1.00mm pitch: Page 105
1.25mm pitch: Page 108
2.54mm pitch: Page 111

LIF THT FPC/FFC Type right angle

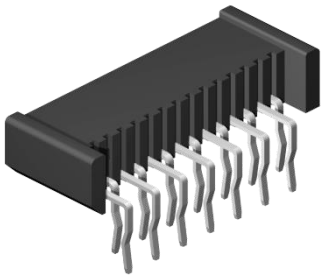

1.00mm pitch: Page 106
1.25mm pitch: Page 109
2.54mm pitch: Page 112

FLEX CABLE

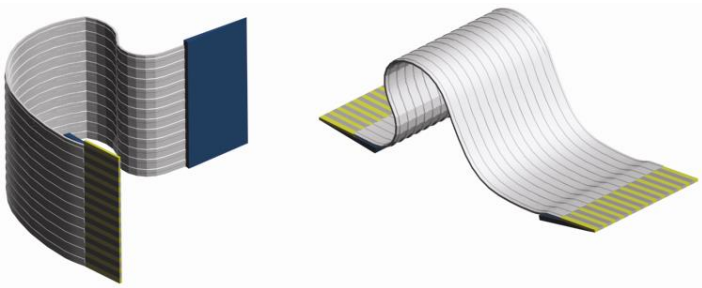

Pitch: 0.50mm - 0.80mm - 1.00mm - 1.25mm - 1.27mm - 2.00mm - 2.54mm Page 113

ZIF Test Sockets for FLEX CABLE

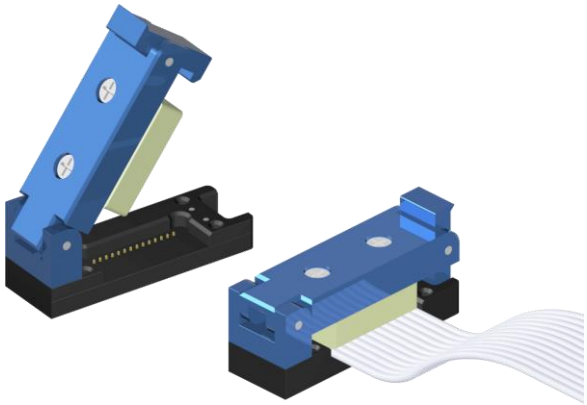

Available for pitch 0.50mm to 2.54mm
Page 114

WIRE TO BOARD CRIMP CONNECTORS

1.00mm pitch Types

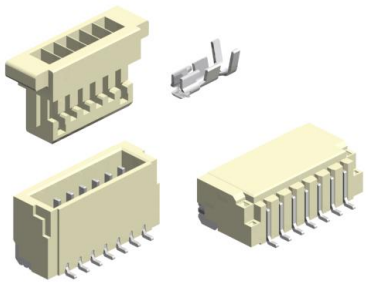

Page 123

1.25mm pitch Types

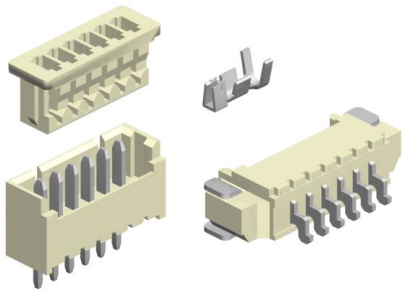

Page 124

1.50mm pitch Types

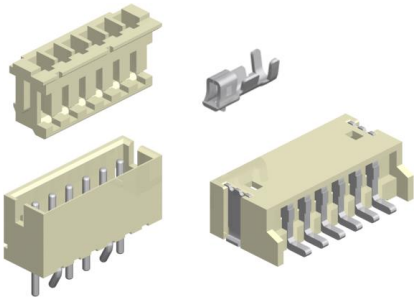

Page 124A

2.00mm pitch Types

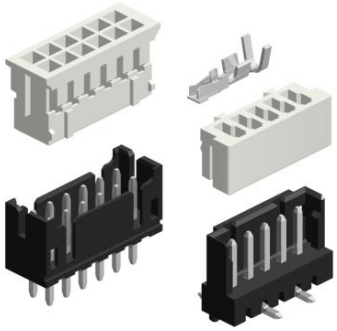

Page 125, 126 & 126-1

2.50mm pitch Types

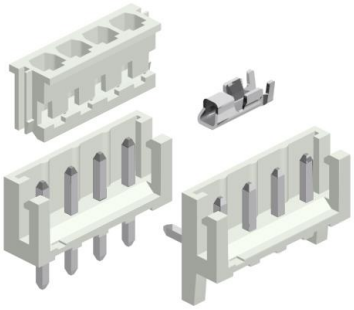

Page 127

2.54mm Types

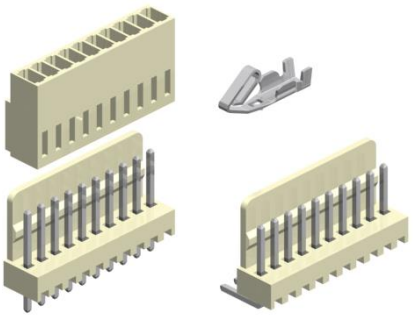

Page 128 & 129

WIRE TO BOARD POWER CONNECTORS

3.00mm Types

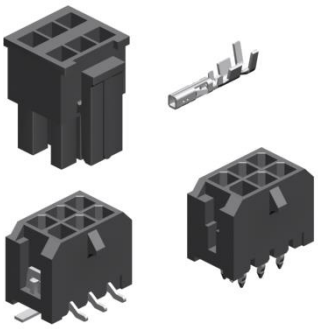

Page 130, 130-1 to 130-4

3.96mm Types

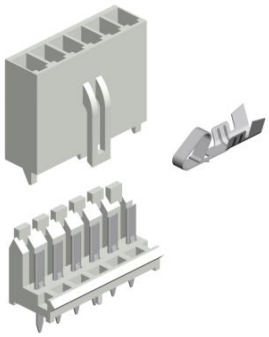

Page 131

4.20mm Types

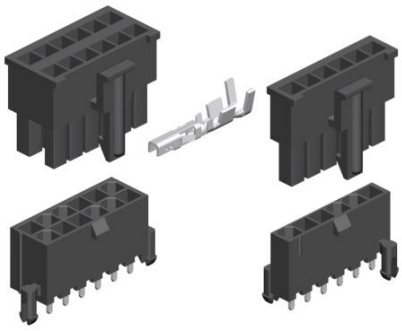

Page 132, 133, 133-1 & 133-2

5.08mm Types

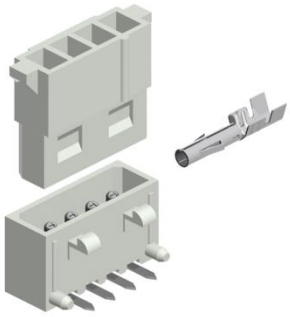

Page 134 & 135 (OBSOLETE)

6.35mm Types

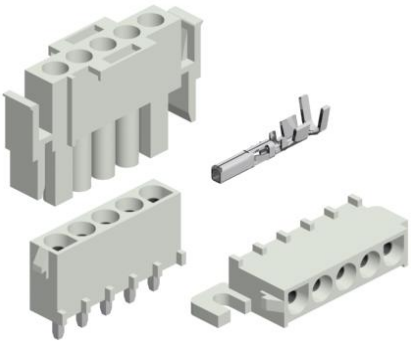

Page 136 & 136-1

Fine Pitch

Plug-Board Connectors

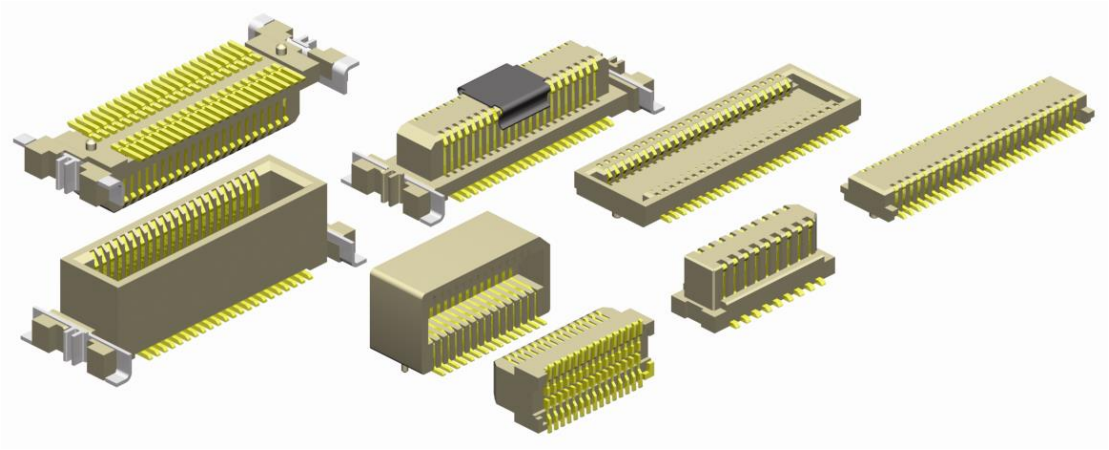

Fine pitch board-to-board connectors allow high density low profile PCB interconnections. These connectors are generally not designed for high insertion/extraction cycles but for one time interconnection, with a possibility to disconnect a limited number of times (around 5 times) during the life time of the product for maintenance purposes only.

Due to the very large variety of design requirements (pincount, board height, pitch, soldertabs, etc) these fine pitch board-to-board connectors are being presented with the following generic E-tec datasheet which allows to highlight the specific project requirements. Based on this information, our production will be able to determine if the current toolings can be adjusted to your requirements and/or if new toolings need to be set-up or if any other close equivalents can be offered as an alternative.

Plug-Board Connector - SMT -

0.50mm - 0.60mm - 0.80mm Pitch

RoHS compliant

E-tec Interconnect

- Fine pitch, super low profile, from 1.50mm to 9.50mm between the boards
- The stamped, solid contacts assure reliable PC Board connections
- Tube or Reel packing available
- Also available with "locating pegs" for easy positioning of the connector during placement
- Some types can also be offered with metal solder tabs, which provide additional mechanical strength to avoid damages to the solder joints during disconnection of the male & female connectors.

Please inform us of your application and precise requirements, so that our product engineers may offer you a suitable solution.

Please indicate your dimensional requirements for the
☐ *0.50mm* ☐ *0.60mm* ☐ *0.80mm* pitch
„Plug-Board" connector.
Solutions **without** metal solder tabs,
but with & without locating pegs.

Number of contacts in total ……

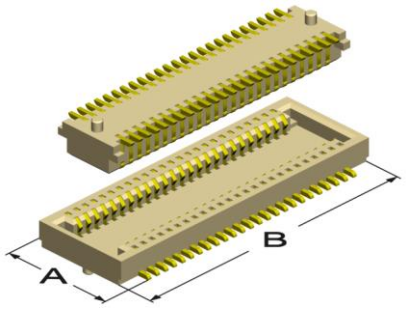

Dimension „A" (max.): ……..
Dimension „B" (max.): ……..

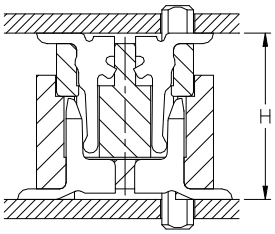

Your board-to-board requirement
Dimension „H": ……..
Do you wish to receive this connector
with ☐ or *without* ☐ locating peg?

Please indicate your dimensional requirements for the
☐ *0.50mm* ☐ *0.60mm* ☐ *0.80mm* pitch
„Plug-Board" connector.
Solutions **with** metal solder tabs,
but with & without locating pegs.

Number of contacts in total ……

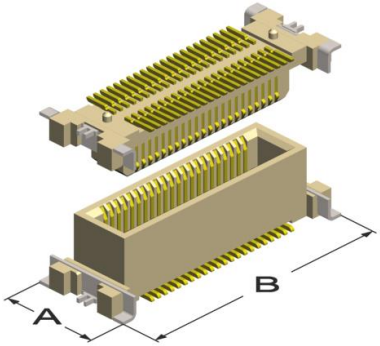

Dimension „A" (max.): ……..
Dimension „B" (max.): ……..

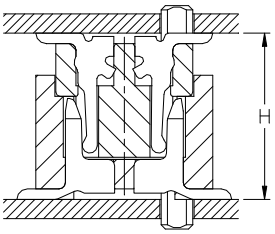

Your board-to-board requirement
Dimension „H": ……..
Do you wish to receive this connector
with ☐ or *without* ☐ locating peg?

Please indicate your dimensional requirements for the
☐ *0.50mm* ☐ *0.60mm* ☐ *0.80mm* pitch
right angle type „Plug-Board" connector.
Solutions **without** metal solder tabs,
but with & without locating pegs.

Number of contacts in total ……

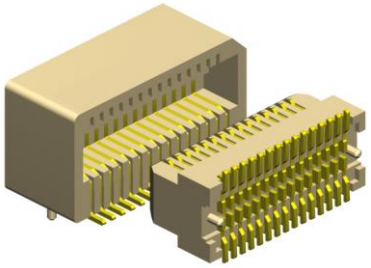

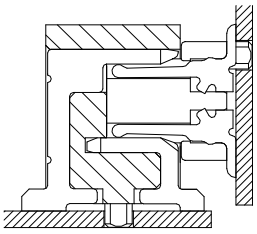

Do you wish to receive this connector
with ☐ or *without* ☐ locating peg?

In addition, please also provide the following information:

For which application do you intend to use our fine pitch „Plug Board" Connector?

……

……

Please indicate your quantity requirement for „prototypes" …… **and „production"** ……

Please also indicate the expected „life time" of your project ……

Your Company Name & Address: ……

……

Your Name, Phone, FAX & e-mail ……

<u>Please FAX this page to the nearest E-tec sales office</u> and we will get back to you as soon as possible with a solution adapted to your needs.

Specifications for E-tec fine pitch Plug Board Connectors

Current rating	0.3 A	Operating temperature	- 45°C to +125°C
Insulation resistance	500 MΩ min. at 100 V DC	Processing temperature	+230°C for 60 sec. max. +260°C for 10 sec. max.
Contact resistance	50 mΩ max. at 100 mA	Contact material	Phosphor Bronze
Withstanding voltage	150 V AC 1 minute	Insulator material	Hi Temp Plastic UL 94 V-0

Board to Board
&
Wire to Board Connectors

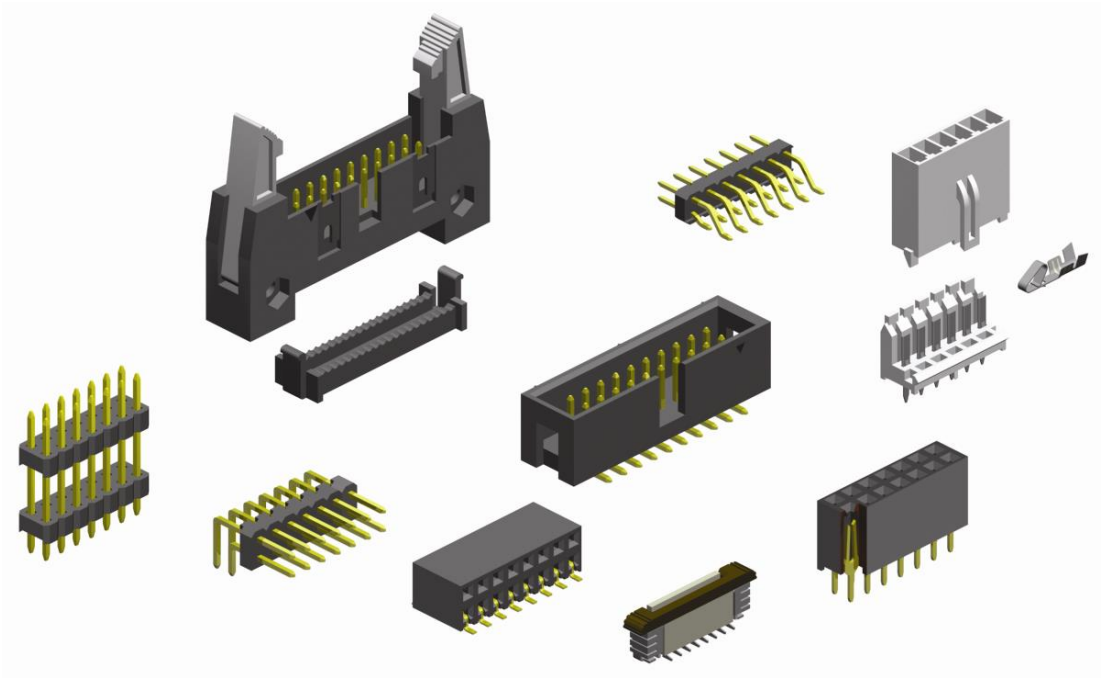

E-tec offers a very large variety of board-to-board and wire-to-board connectors, which take care of nearly all requirements a customer may have in terms of required board connections.

The male/female board-to-board connectors are available in 1.00mm, 1.27mm, 2.00mm and 2.54mm pitch. For the wire-to-board connectors the available pitches start from 0.50mm upwards. The following catalog pages show the standard connector designs, but many other pin lengths or custom designs can be offered on request.

1.00mm pitch Pin Header
- THT - dual row straight

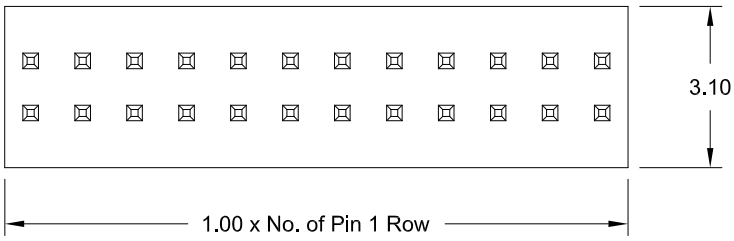

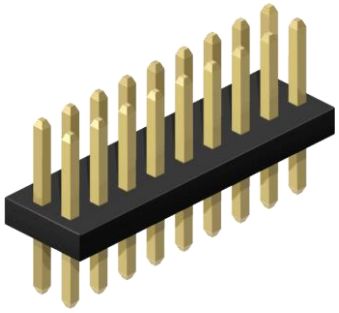

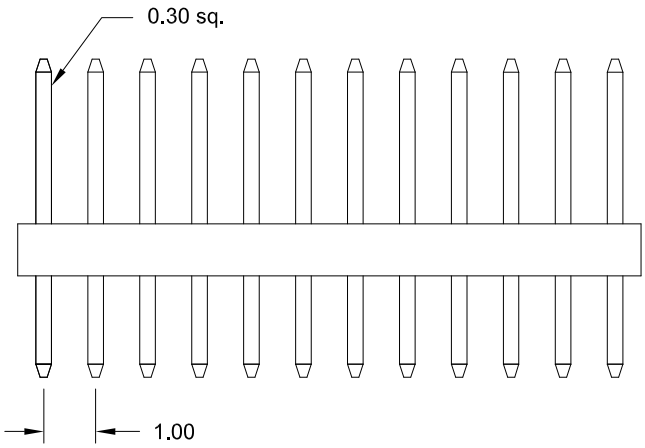

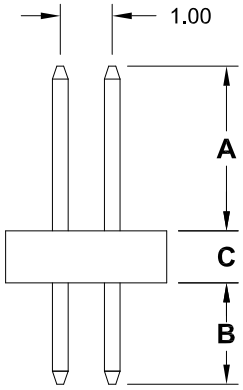

Specifications

Current rating		1 A
Insulation resistance		1000 MΩ min.
Withstanding voltage		500 V AC
Operating temperature		- 40°C to +105°C
Contact material	*(RoHS compliant)*	Copper Alloy
Insulator material	*(RoHS compliant)*	PA9T UL 94 V-0

PCB Hole Layout

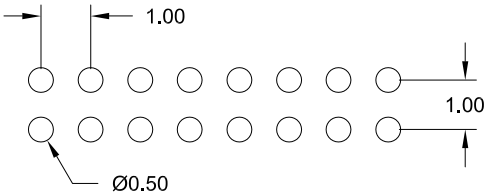

How to order

SL2 - xxx - S xxx/x - 55/00

Nbr of pins
004 to **080**

Pin code	DIM "A"	DIM "B"	DIM "C"
050/1	2.00 mm	2.00 mm	1.00 mm
050/2	3.20 mm	2.30 mm	1.00 mm
050/3	3.00 mm	2.30 mm	1.00 mm
112/1	6.50 mm	3.20 mm	1.50 mm
other dimensions on request			

Plating
55 = Gold
other platings on request

1.00mm pitch Pin Header

- SMT - low profile dual row

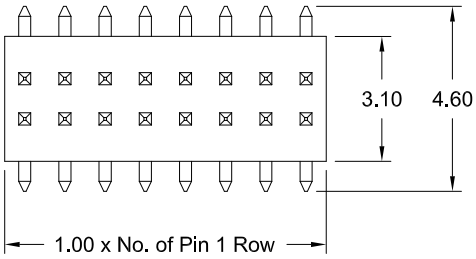

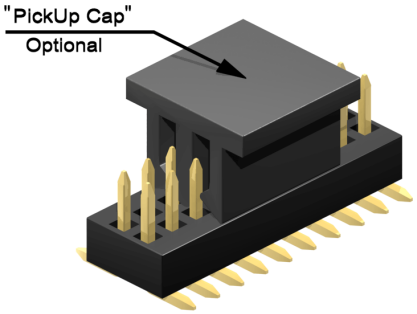

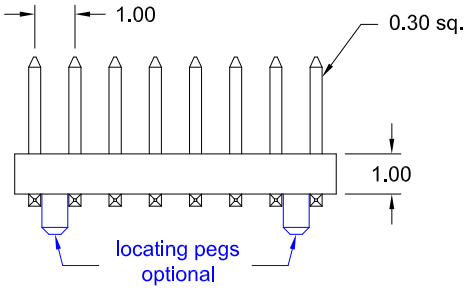

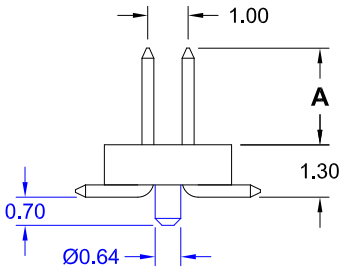

Application and Features

- ***Standard: Tube packing, without "locating pegs" and without "PickUp Cap"***
- Assures reliable PC Board connections
- Fine pitch, low profile type with 0.30mm square pin
- Mate with Female Header BS2-xxx-H222-55/00X then "board to board" distance 3.60mm

PCB Surface Mount Layout

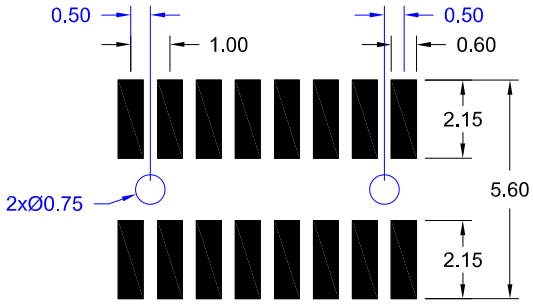

Specifications

Current rating	1 A
Insulation resistance	1000 MΩ min.
Withstanding voltage	500 V AC

Operating temperature	- 40°C to +105°C
Processing temperature	+250°C +0/-5°C for 5sec.
Contact material *(RoHS compliant)*	Copper Alloy
Insulator material *(RoHS compliant)*	PA9T UL 94 V-0

How to order

SS2 - xxx - H 18/x - 55/00 X

Nbr of pins
008 to **100**

Pin code	DIM "**A**"
18/0	1.90 mm
18/1	2.40 mm
18/2	1.65 mm
18/3	5.40 mm
18/4	3.00 mm

Plating
55 = Gold
other platings on request

Options
without "locating pegs"
A = Tube packing; with „PickUp Cap"
B = Reel packing; with „PickUp Cap"
with "locating pegs"
C = Tube packing; without „PickUp Cap"
D = Tube packing; with „PickUp Cap"
E = Reel packing; with „PickUp Cap"

1.00mm pitch Board Spacer
- SMT - dual row

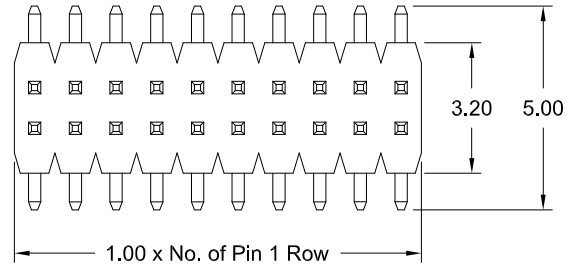

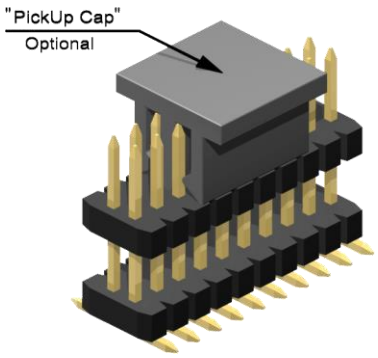

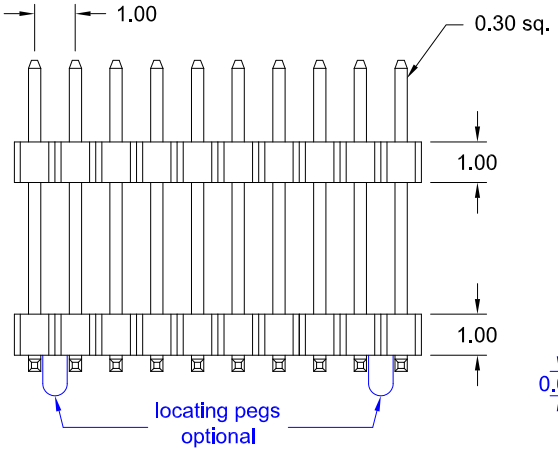

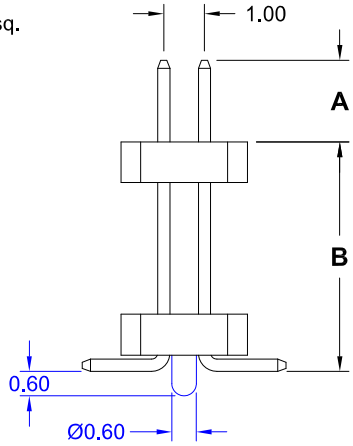

Specifications

Current rating		1 A
Insulation resistance		1000 MΩ min.
Withstanding voltage		500 V AC
Operating temperature		- 40°C to +105°C
Processing temperature		+250°C +0/-5°C for 5sec.
Contact material	*(RoHS compliant)*	Copper alloy
Insulator material	*(RoHS compliant)*	PA9T UL 94 V-0

PCB Surface Mount Layout

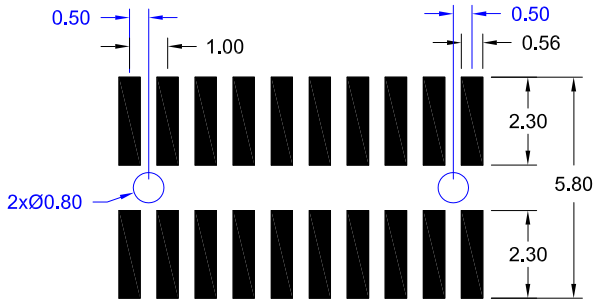

How to order

SP2 - xxx - H 51/x - 55/00 X

Nbr of pins	Pin code	DIM "A"	DIM "B"
002 to **100**	**51/0**	2.00 mm	7.80 mm
	51/1	2.00 mm	5.80 mm
	51/2	2.00 mm	9.70 mm
	51/3	2.00 mm	3.70 mm
	51/4	2.00 mm	14.00 mm
	51/5	2.00 mm	6.30mm
	51/6	2.00 mm	17.00 mm
	other dimensions on request		

Plating

55 = Gold

other platings on request

Options

without "locating pegs"

- **A** = Tube packing; with „PickUp Cap"
- **B** = Reel packing; with „PickUp Cap"

with "locating pegs"

- **C** = Tube packing; without „PickUp Cap"
- **D** = Tube packing; with „PickUp Cap"
- **E** = Reel packing; with „PickUp Cap"

1.00mm pitch Female Header
- SMT - low profile dual row

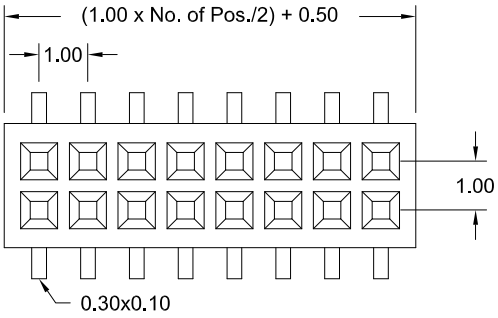

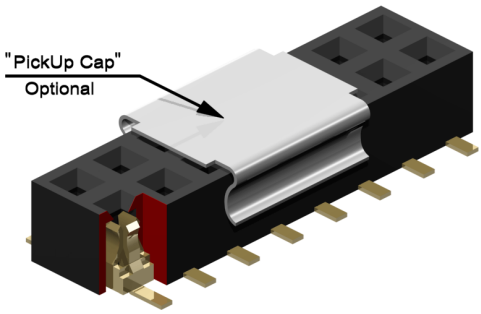

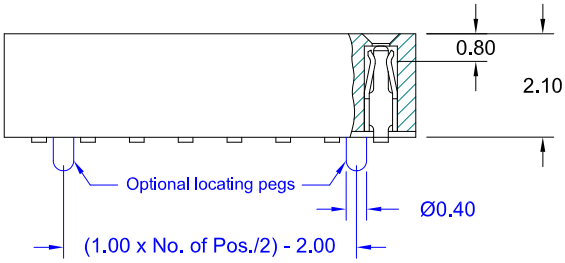

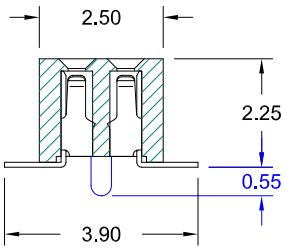

Application and Features

- ***Standard: Tube packing, without "locating pegs" and without "PickUp Cap"***
- Assures reliable PC Board connections
- Fine pitch, low profile for space saving Application
- Accept 0.30mm square Pin Header

PCB Surface Mount Layout

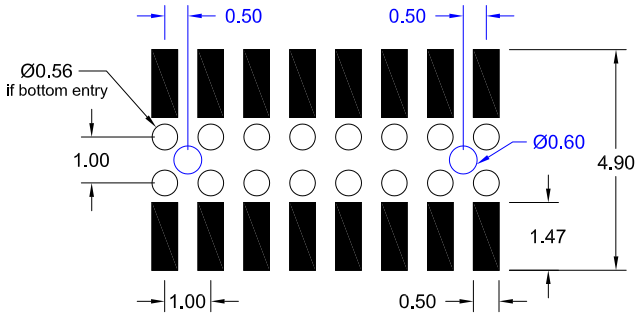

Specifications

Current rating	1 A
Insulation resistance	100 MΩ min.
Contact resistance	20 mΩ max.
Withstanding voltage	500 V AC

Operating temperature	- 40°C to +105°C
Processing temperature	+250°C +0/-5°C for 5sec.
Contact material *(RoHS compliant)*	Phosphor Bronze
Insulator material *(RoHS compliant)*	LCP UL 94 V-0

How to order

BS2 - xxx - H222 - 55/00X

Nbr of contacts	Plating	Options
without "locating pegs" **004** to **068** with "locating pegs" **008** to **068**	**55** = Gold other platings on request	**without "locating pegs"** **A** = Tube packing; with „PickUp Cap" **B** = Reel packing; with „PickUp Cap" **with "locating pegs"** **C** = Tube packing; without „PickUp Cap" **D** = Tube packing; with „PickUp Cap" **E** = Reel packing; with „PickUp Cap"

1.27mm pitch Pin Header
- THT - single row straight

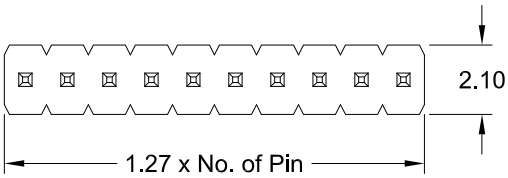

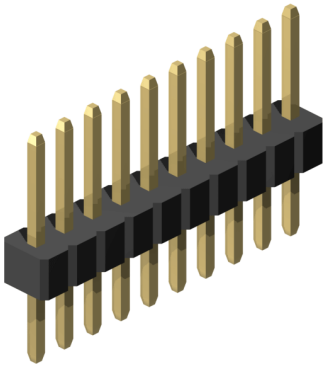

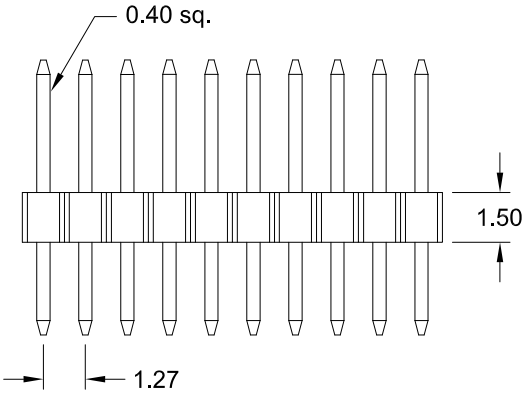

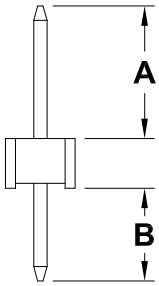

Specifications

Current rating	1 A
Insulation resistance	1000 MΩ min.
Withstanding voltage	500 V AC
Operating temperature	- 40°C to +105°C
Contact material *(RoHS compliant)*	Copper alloy
Insulator material *(RoHS compliant)*	PA6T UL 94 V-0

PCB Hole Layout

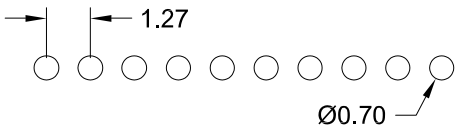

How to order

SL1 - xxx - B xxx/x - 55/11

Nbr of pins
002 to **050**

Pin code	DIM "**A**"	DIM "**B**"
083/0	4.00 mm	2.80 mm
083/1	1.70 mm	2.40 mm
083/2	3.90 mm	3.90 mm
083/3	4.50 mm	2.80 mm
083/4	3.00 mm	3.00 mm
083/5	8.90 mm	7.60 mm
083/6	3.00 mm	2.30 mm
083/7	3.60 mm	2.80 mm
083/8	3.00 mm	2.80 mm
other dimensions on request		

Plating
55 = Gold
other platings on request

1.27mm pitch Pin Header

- THT - single & dual row straight

RoHS compliant

E-tec Interconnect

Style **S063/x** & **S064/x**

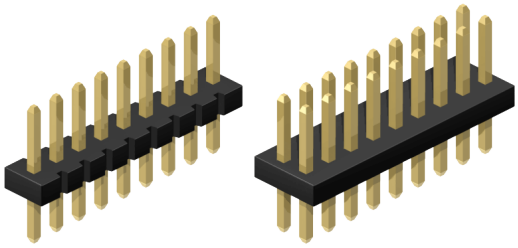

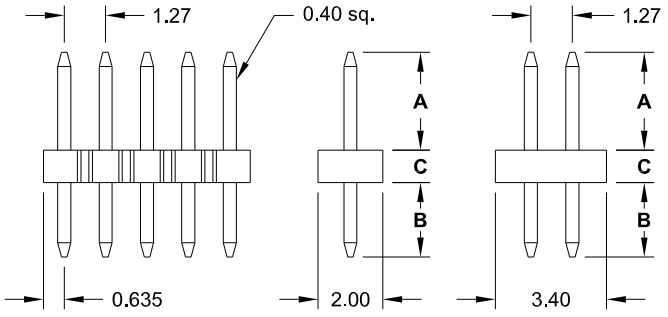

Style **S081/x**

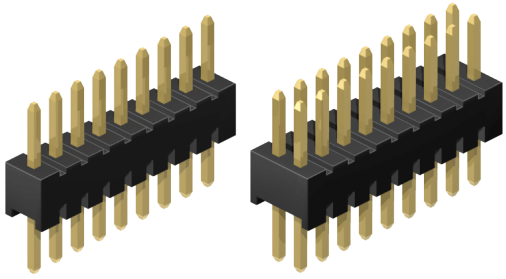

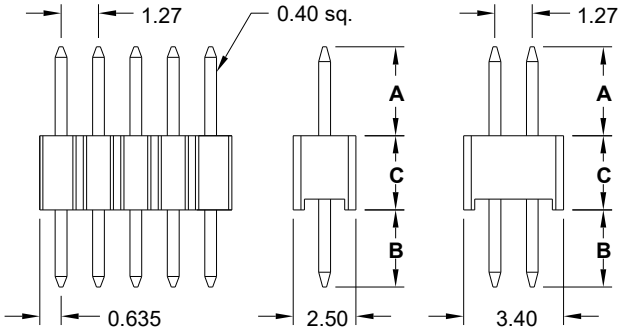

PCB Hole Layout

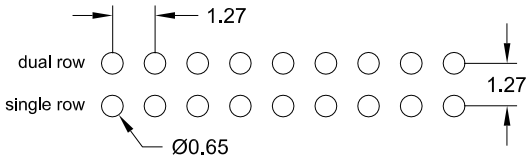

PCB Hole Layout

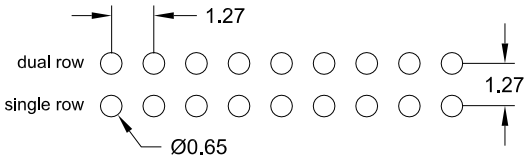

Specifications

Current rating	1 A	Operating temperature	- 40°C to +105°C
Insulation resistance	1000 MΩ min.	Contact material *(RoHS compliant)*	Copper Alloy
Withstanding voltage	500 V AC	Insulator material *(RoHS compliant)*	PA6T UL 94 V-0

How to order

SL x - xxx - S xxx/x - 55/11

Rows
1 = single row
2 = dual row

Nbr of pins
002 to **050**
004 to **100**

Pin code	DIM "A"	DIM "B"	DIM "C"
063/1	3.00 mm	2.30 mm	1.00 mm
063/2	7.00 mm	2.30 mm	1.00 mm
063/3	5.00 mm	2.30 mm	1.00 mm
063/4	3.10 mm	1.90 mm	1.00 mm
063/5	2.80 mm	2.50 mm	1.00 mm
064/0	7.50 mm	5.00 mm	1.50 mm
Insulator thickness 2.00mm on request.			
081/1	3.00 mm	2.60 mm	2.50 mm
081/2	4.00 mm	2.60 mm	2.50 mm
081/3	6.00 mm	2.60 mm	2.50 mm
other dimensions on request			

Plating
55 = Gold
other platings on request

1.27mm pitch Pin Header
- THT - single & dual row right angle

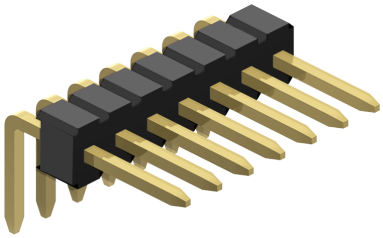

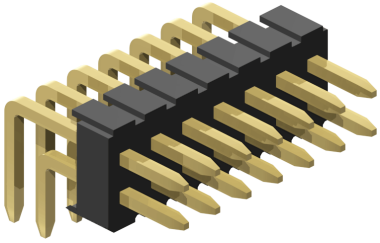

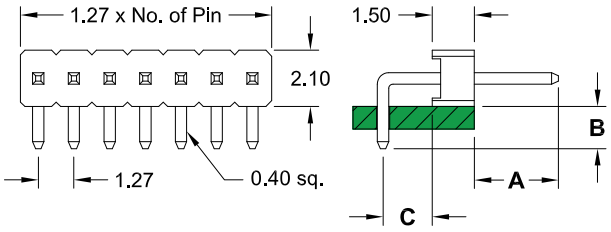

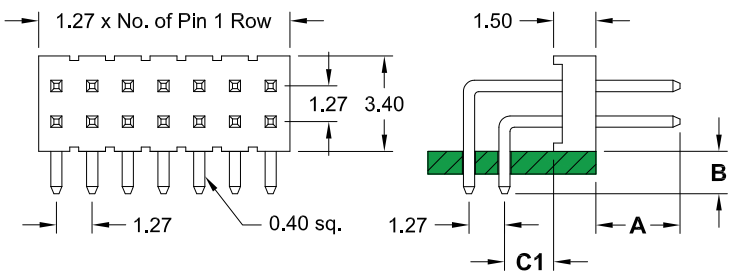

Specifications

Current rating		1 A
Insulation resistance		1000 MΩ min.
Withstanding voltage		500 V AC
Operating temperature		- 40°C to +105°C
Contact material	*(RoHS compliant)*	Copper Alloy
Insulator material	*(RoHS compliant)*	PA6T UL 94 V-0

PCB Hole Layout

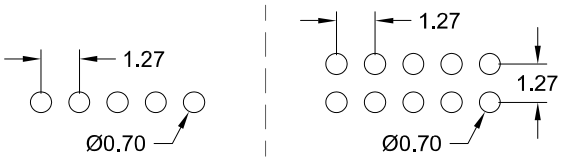

How to order

SL x - xxx - R xxx/x - 55/11

Rows	Nbr of pins
1 = single row	**002** to **050**
2 = dual row	**006** to **100**

Pin code	DIM "**A**"	DIM "**B**"	DIM "**C**" (1 row)	DIM "**C1**" (2 row)
071/0	3.80 mm	3.00 mm	1.50 mm	1.70 mm
071/1	4.80 mm	2.50 mm	0.80 mm	1.00 mm
071/2	3.00 mm	3.00 mm	1.50 mm	1.70 mm
071/3	3.80 mm	4.50 mm	1.50 mm	1.70 mm
071/4	3.80 mm	1.60 mm	1.50 mm	1.70 mm
071/5	3.00 mm	2.80 mm	1.50 mm	1.70 mm
071/6	4.00 mm	4.00 mm	1.50 mm	1.70 mm
other dimensions on request				

Plating
55 = Gold
other platings on request

1.27mm pitch Board Spacer
- THT - single & dual row

RoHS compliant

E-tec Interconnect

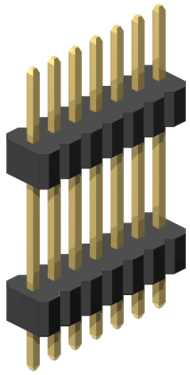

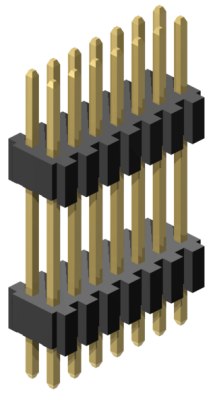

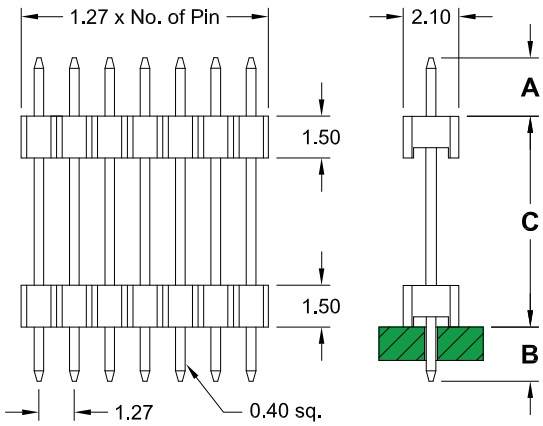

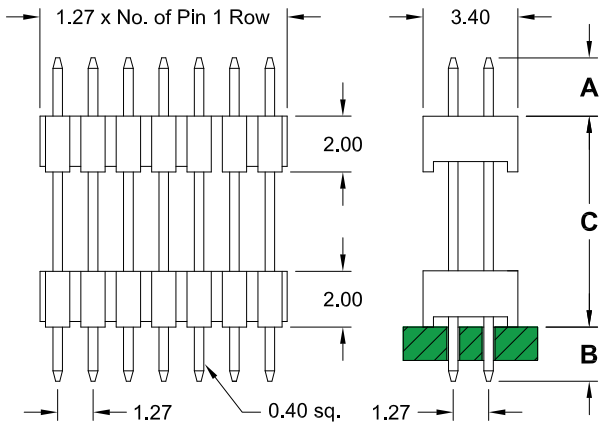

PCB Hole Layout

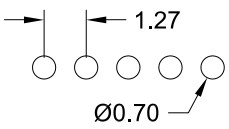

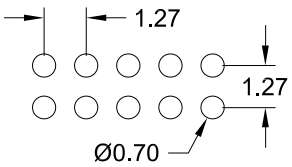

Specifications

Current rating	1 A
Insulation resistance	1000 MΩ min.
Withstanding voltage	500 V AC
Operating temperature	- 40°C to +105°C
Contact material	Copper Alloy *(RoHS compliant)*
Insulator material	PA6T UL 94 V-0 *(RoHS compliant)*

Pin code	DIM "A"	DIM "B"	DIM "C"
162/1	5.70 mm	5.70 mm	4.80 mm
179/0	5.85 mm	5.85 mm	6.15 mm
130/2	3.70 mm	2.30 mm	7.00 mm
130/3	3.00 mm	3.00 mm	7.00 mm
150/2	4.00 mm	3.00 mm	8.00 mm
127/1	2.20 mm	2.20 mm	8.30 mm
152/2	3.60 mm	2.60 mm	9.00 mm
180/3	4.00 mm	4.00 mm	10.00 mm
205/1	3.00 mm	6.50 mm	11.00 mm
190/1	3.00 mm	3.00 mm	13.00 mm
220/1	6.00 mm	3.00 mm	13.00 mm
200/1	3.00 mm	3.00 mm	14.00 mm
230/1	3.00 mm	6.00 mm	14.00 mm
210/4	3.50 mm	3.00 mm	14.50 mm
230/2	3.00 mm	3.00 mm	17.00 mm
244/2	4.00 mm	3.00 mm	17.40 mm
265/1	4.60 mm	3.00 mm	18.90 mm

other dimensions on request

How to order

SP x - xxx - S xxx/x - 55/11

Rows	Nbr of pins	Pin code	Plating
1 = single row	**003** to **050**	dimension and others see above table	**55** = Gold
2 = dual row	**006** to **100**		other platings on request

1.27mm Pin Header & Board Spacer

1.27mm x 2.54mm Board Spacer

RoHS compliant

E-tec Interconnect

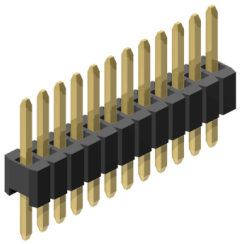

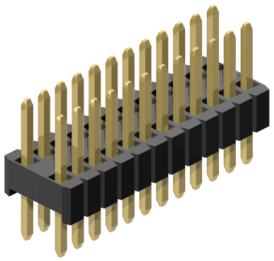

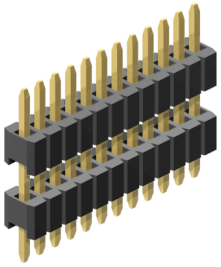

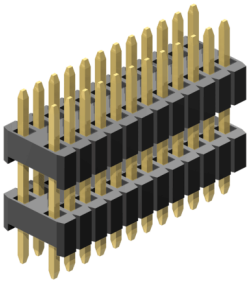

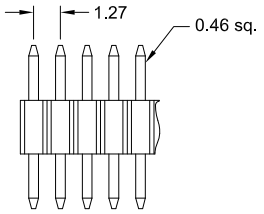

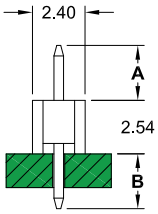

SL1

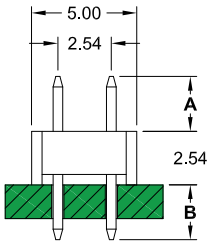

SL2

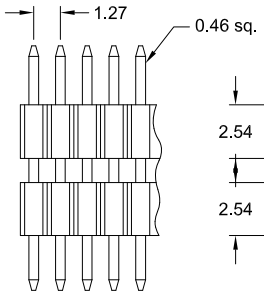

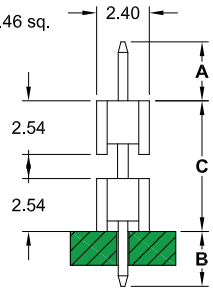

SP1

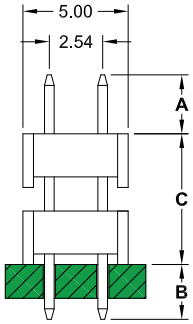

SP2

Specifications

Current rating	1 A
Insulation resistance	1000 MΩ min.
Withstanding voltage	500 V AC
Operating temperature	- 40°C to +105°C
Contact material *(RoHS compliant)*	Copper Alloy
Insulator material *(RoHS compliant)*	PA6T UL 94 V-0

PCB Hole Layout

single row

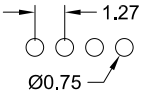

dual row

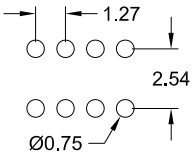

How to order

S xx - xxx - S xxx/xx - 55/1

Rows single plastic	Nbr of pins
L1 = single row	single row = **003** to **050**
L2 = dual row	dual row = **006** to **100**

Pin code	DIM "A"	DIM "B"
079/01	2.80 mm	2.60 mm
091/02	4.00 mm	2.60 mm
111/01	6.00 mm	2.60 mm
164/01	2.50 mm	11.40 mm
179/01	12.30 mm	3.10 mm
other dimensions on request		

Plating
55 = Gold
other platings on request

Rows Boardspacer	Nbr of pins
P1 = single row	single row = **003** to **050**
P2 = dual row	dual row = **006** to **100**

Pin code	DIM "A"	DIM "B"	DIM "C"
084/01	1.10 mm	1.30 mm	6.00 mm
116/01	2.80 mm	2.60 mm	6.20 mm
152/01	6.00 mm	3.00 mm	6.20 mm
127/01	2.20 mm	2.20 mm	8.30 mm
137/01	3.00 mm	2.30 mm	8.40 mm
160/06	3.00 mm	4.00 mm	9.00 mm
210/06	5.50 mm	2.50 mm	13.00 mm
218/01	6.00 mm	1.80 mm	14.00 mm
other dimensions on request			

1.27mm pitch Pin Header

- SMT - low profile dual row

RoHS compliant

E-tec Interconnect

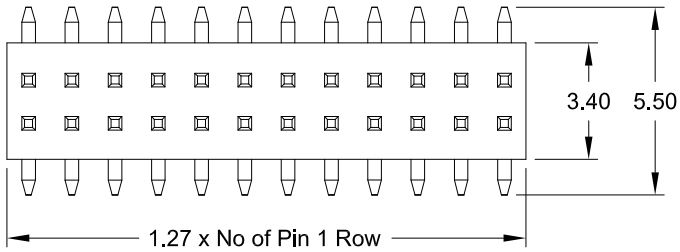

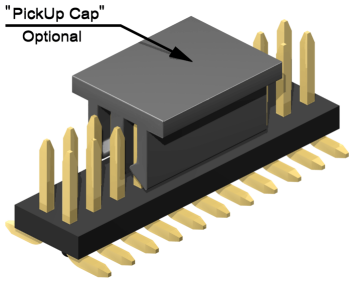

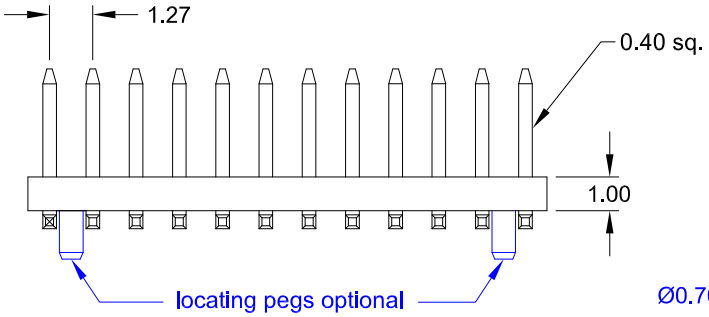

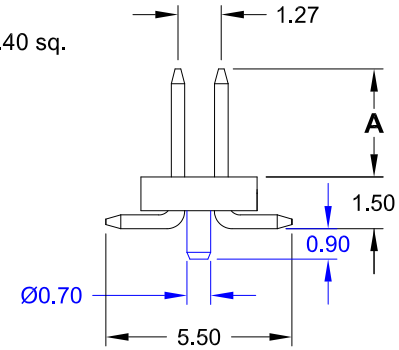

Application and Features

- ***Standard: Tube packing, without "locating pegs" and without "PickUp Cap"***
- Assures reliable PC Board connections
- Low profile insulator
- Mates with 1.27mm pitch Female Headers

PCB Surface Mount Layout

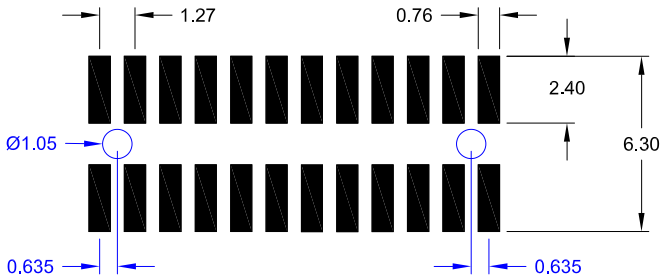

Specifications

Current rating	1 A
Insulation resistance	1000 MΩ min.
Withstanding voltage	500 V AC

Operating temperature		- 40°C to +105°C
Processing temperature		+250°C +0/-5°C for 5sec.
Contact material	*(RoHS compliant)*	Copper Alloy
Insulator material	*(RoHS compliant)*	PA6T UL 94 V-0

How to order

SS2 - xxx - H xx/x - 55/11 X

Nbr of pins
without locating pegs: **006** to **100**
with locating pegs: **008** to **100**

Pin code	DIM "A"
70/0	3.00 mm
70/1	10.00 mm
70/2	6.50 mm
70/3	12.50 mm
70/4	4.00 mm
other dimensions on request	

Plating
55 = Gold
other platings on request

Options
without "locating pegs"
A = Tube packing; with „PickUp Cap"
B = Reel packing; with „PickUp Cap"
with "locating pegs" (available only from 008 to 100 pins)
C = Tube packing; without „PickUp Cap"
D = Tube packing; with „PickUp Cap"
E = Reel packing; with „PickUp Cap"

1.27mm pitch Board Spacer
- SMT - dual row

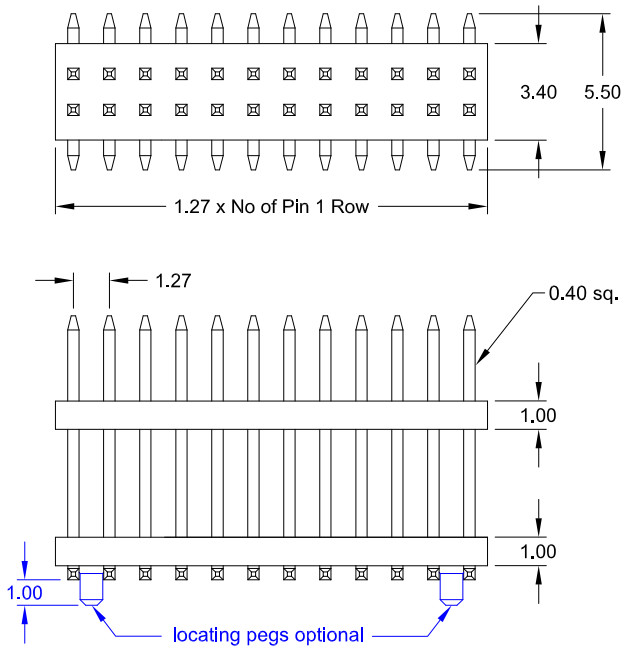

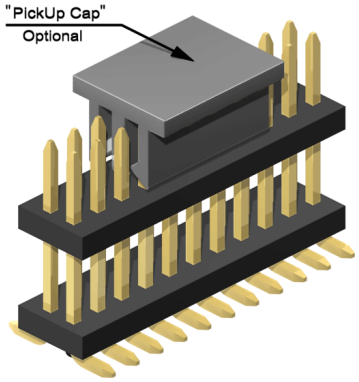

Specifications

Current rating		1 A
Insulation resistance		1000 MΩ min.
Withstanding voltage		500 V AC
Operating temperature		- 40°C to +105°C
Processing temperature		+250°C +0/-5°C for 5sec.
Contact material	*(RoHS compliant)*	Copper alloy
Insulator material	*(RoHS compliant)*	PA6T UL 94 V-0

PCB Surface Mount Layout

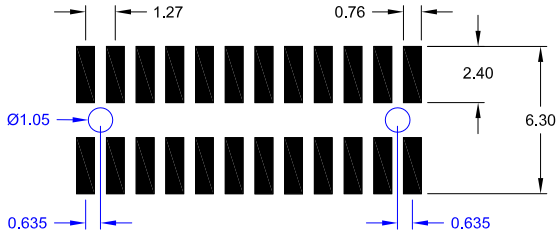

How to order

SP2 - xxx - H xx/x - 55/11 X

Nbr of pins
without "locating pegs"
006 to **100**
witht "locating pegs"
008 to **100**

Pin code	DIM "A"	DIM "B"
21/9	4.10 mm	2.90 mm
22/9	5.20 mm	3.80 mm
21/1	3.00 mm	4.00 mm
22/8	1.50 mm	4.40 mm
22/3	5.00 mm	4.50 mm
21/2	3.00 mm	5.50 mm
22/5	6.00 mm	5.50 mm
21/0	3.00 mm	6.00 mm
22/0	3.00 mm	7.00 mm
22/2	4.70 mm	7.10 mm
22/4	4.00 mm	7.50 mm
21/8	4.80 mm	7.50 mm
23/0	6.10 mm	7.50 mm
21/3	5.60 mm	8.00 mm
21/7	4.00 mm	8.30 mm
21/5	3.00 mm	9.00 mm
21/4	3.80 mm	9.65 mm
22/1	5.10 mm	10.20 mm
22/6	3.00 mm	11.50 mm
22/7	3.00 mm	14.00 mm
21/6	3.00 mm	16.00 mm
other dimensions on request		

Plating
55 = Gold
other platings on request

Options

without "locating pegs"

- **A** = Tube packing; with „PickUp Cap"
- **B** = Reel packing; with „PickUp Cap"

with "locating pegs" (available only from 008 to 100 pins)

- **C** = Tube packing; without „PickUp Cap"
- **D** = Tube packing; with „PickUp Cap"
- **E** = Reel packing; with „PickUp Cap"

1.27mm - SMT - Pin Header
dual row 1.27mm x 2.54mm

RoHS compliant

E-tec Interconnect

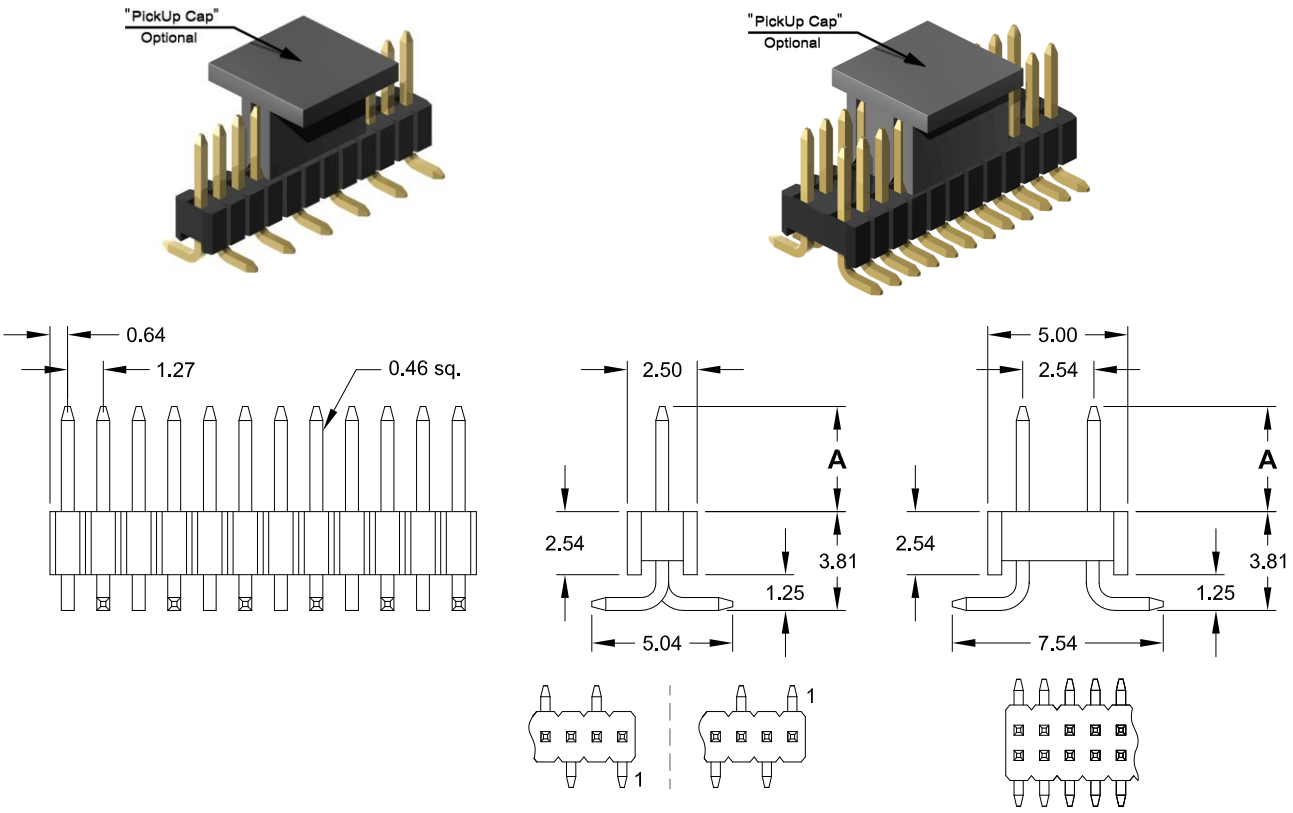

Foot Style: **380** **381** **380**

Specification

Current rating		1 A
Insulation resistance		1000 MΩ min.
Withstanding voltage		500 V AC
Operating temperature		- 40°C to +105°C
Processing temperature		+250°C +0/-5°C for 5sec.
Contact material	*(RoHS compliant)*	Copper Alloy
Insulator material	*(RoHS compliant)*	PA6T UL 94 V-0

PCB Surface Mount Layout

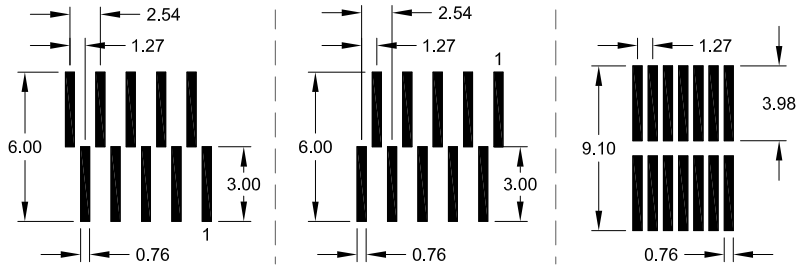

Foot Style: **380** (single row) **381** (single row) **380** (dual row)

How to order

SS x - xxx - H xxx / x - 55/1 X

Rows	Nbr of pins	Foot Style	Pin code	DIM "A"	Plating	Packing and "PickUp Cap" Option
1 = single row	**003** to **050**	**380** / **0** **381** / **0** Pls. choose **380** style if odd pin count.		2.80 mm 2.80 mm	**55** = Gold other platings on request	**A** = Tube packing; with "PickUp Cap" **B** = Reel packing; with "PickUp Cap"
2 = dual row	**006** to **100**	**380** / **0** **380** / **1** **380** / **2** **380** / **3**		2.80 mm 4.50 mm 5.50 mm 4.80 mm		
		other dimensions on request				

1.27mm x 2.54mm Board Spacer
- SMT - dual row

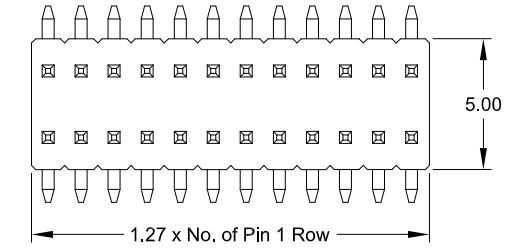

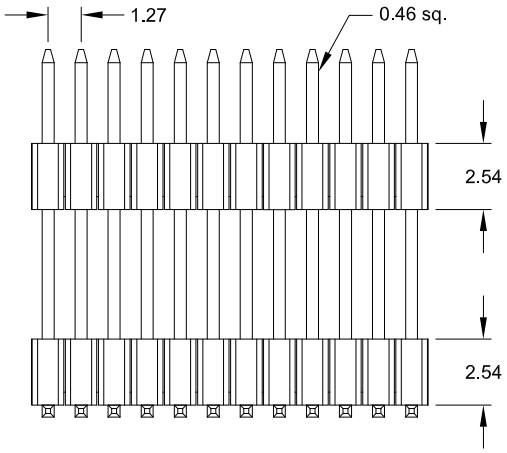

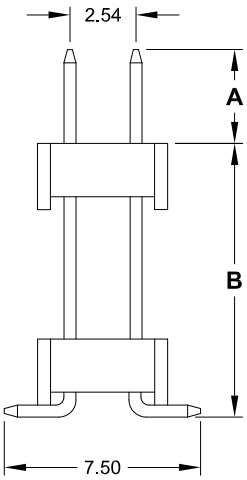

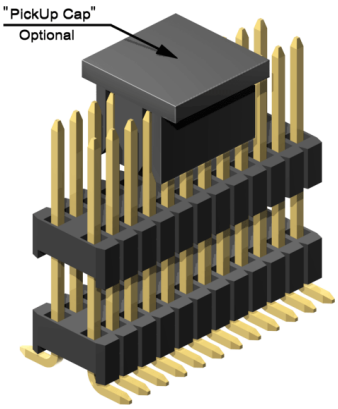

Specifications

Current rating	1 A
Insulation resistance	1000 MΩ min.
Withstanding voltage	500 V AC
Operating temperature	- 40°C to +105°C
Processing temperature	+250°C +0/-5°C for 5sec.
Contact material *(RoHS compliant)*	Copper Alloy
Insulator material *(RoHS compliant)*	PA9T UL 94 V-0

PCB Surface Mount Layout

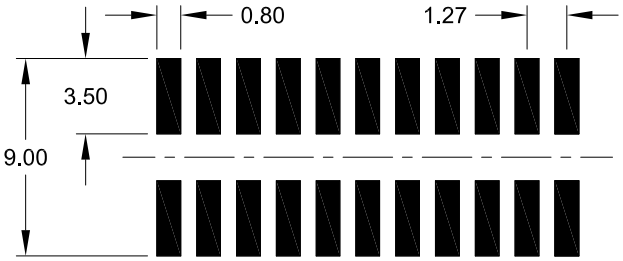

How to order

SP2 - xxx - H 220/x - 55/1 X

Nbr of pins
006 to **100**

Pin code	DIM "A"	DIM "B"
220/0	5.60 mm	8.50 mm
220/1	5.60 mm	9.75 mm
220/2	3.40 mm	12.00 mm
220/3	3.30 mm	6.50 mm
220/4	4.00 mm	8.00 mm
220/5	6.00 mm	12.00 mm
220/6	5.00 mm	12.00 mm
other dimensions on request		

Plating
55 = Gold
other platings on request

Packing and "PickUp Cap" Option (standard Tube packing; without "PickUp Cap")		
A	=	Tube packing; with "PickUp Cap"
B	=	Reel packing; with "PickUp Cap"

1.27mm pitch Box Header

- THT - straight - raised

Style **S535**

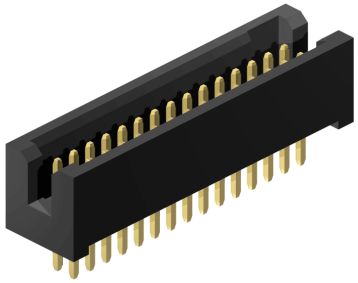

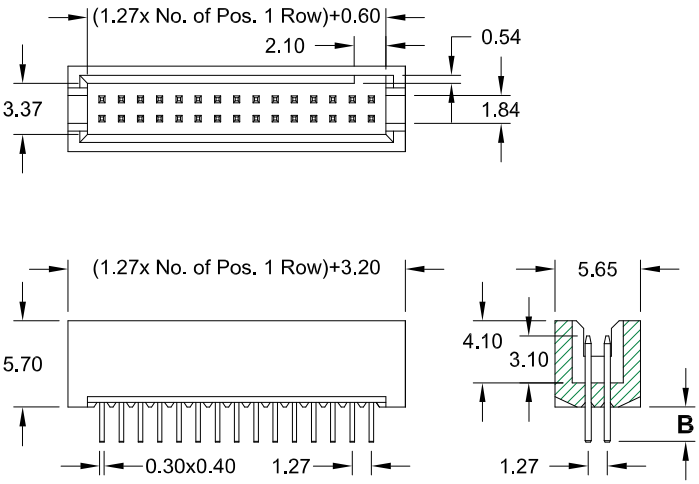

Style **P535**

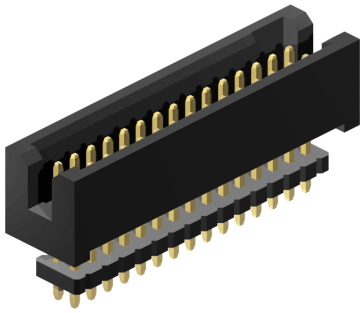

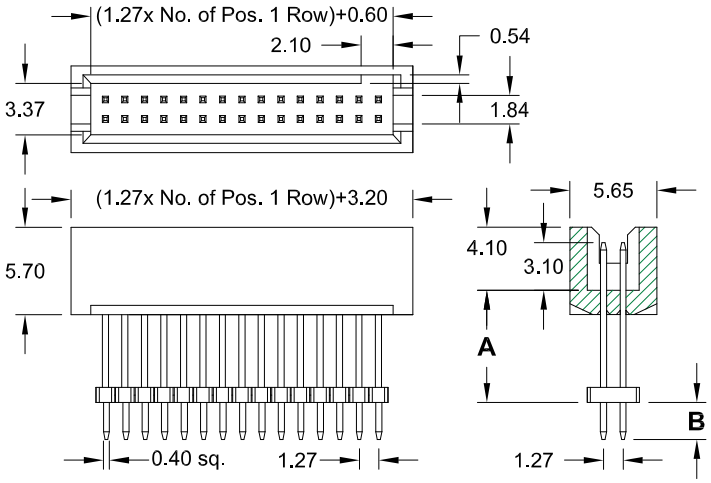

Specifications

Current rating	1 A
Insulation resistance	1000 MΩ min.
Contact resistance	20mΩ max.
Withstanding voltage	300 V AC
Operating temperature	- 40°C to +105°C
Contact material *(RoHS compliant)*	**S535**: PhBz **P535**: Brass
Insulator material *(RoHS compliant)*	LCP UL 94 V-0

PCB Hole Layout

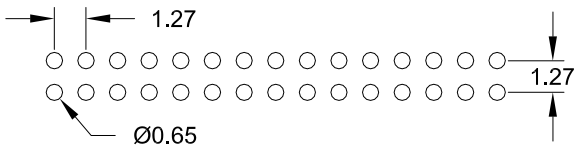

Application and Features

Mating with 1.27mm pitch Female Headers BS2-xxx-H45B- & -H45P-55/11 (page 33) as “board to board” connection.

No ejection latches for space saving

How to order

SLS - xxx - Xxxx - 55/11

Nbr of pins
010 to **100**

Style	DIM “**A**”	DIM “**B**”
straight standard **S535**		2.40 mm
straight raised **P535/0**	16.00 mm	2.40 mm
P535/1	12.40 mm	2.40 mm
other dimensions on request		

Plating
55 = Gold
other platings on request

1.27mm pitch Box Header
- THT - right angle

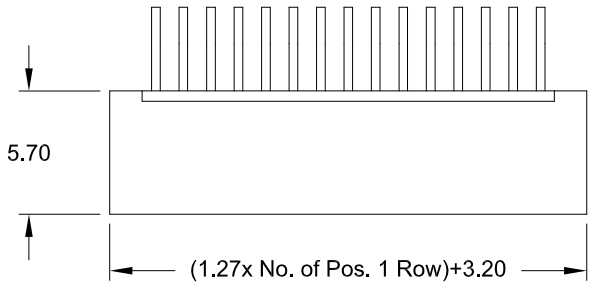

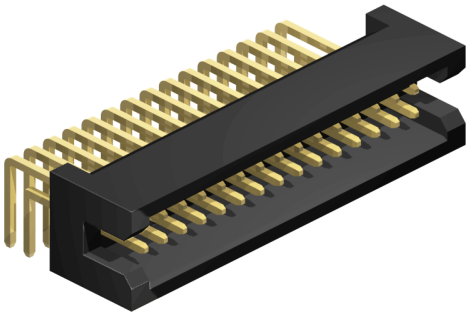

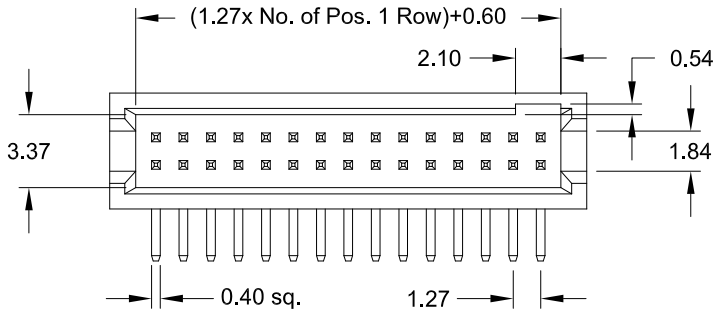

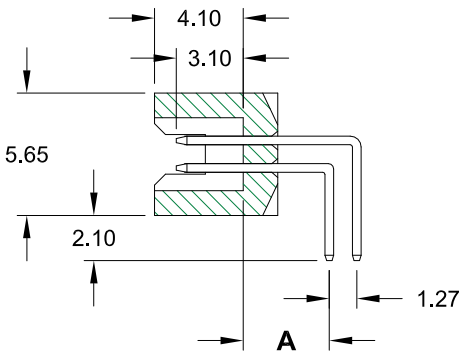

Specifications

Current rating		1 A
Insulation resistance		1000 MΩ min.
Contact resistance		20 mΩ max.
Withstanding voltage		300 V AC
Operating temperature		- 40°C to +105°C
Contact material	*(RoHS compliant)*	Copper Alloy
Insulator material	*(RoHS compliant)*	LCP UL 94 V-0

PCB Hole Layout

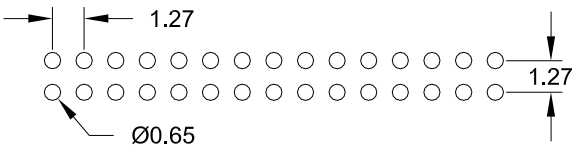

Application and Features

Mating with 1.27mm pitch Female Headers BS2-xxx-H45B- & -H45P-55/11 (page 33) as “board to board” connection.

No ejection latches for space saving.

How to order

SLS - xxx - R xxx/x - 55/11

Nbr of pins
010 to **100**

Pin code		DIM “**A**”
565/0	*(standard)*	2.10 mm
565/1		3.70 mm
other dimensions on request		

Plating
55 = Gold
other platings on request

1.27mm pitch Box Header

- SMT -

RoHS compliant

E-tec Interconnect

Style **H610**

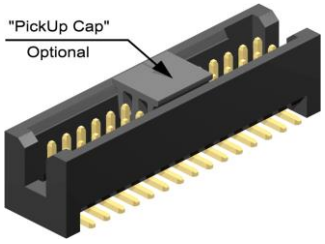

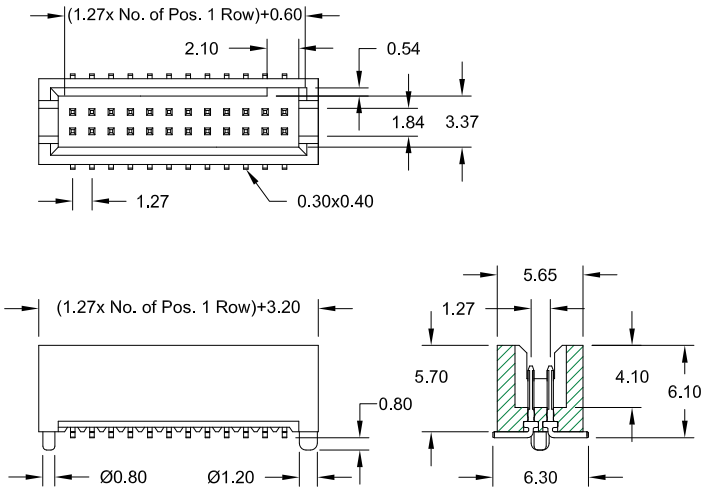

Style **HPxx**

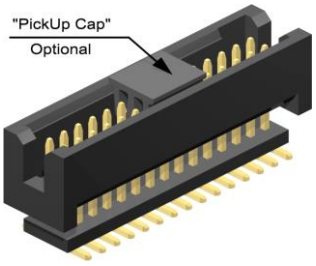

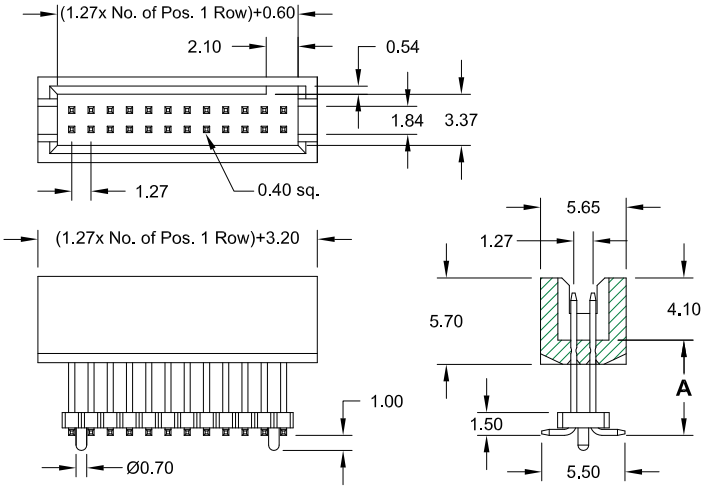

PCB Surface Mount Layout

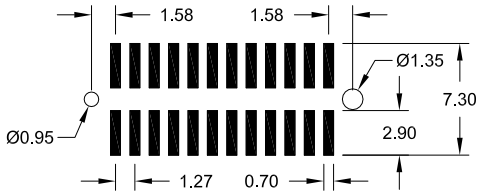

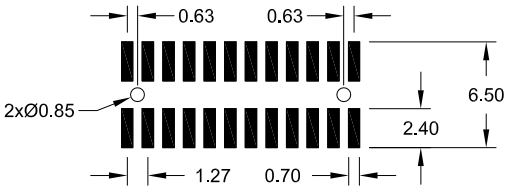

Specifications

Current rating	1 A
Insulation resistance	1000 MΩ min.
Contact resistance	20 mΩ max.
Withstanding voltage	300 V AC

Operating temperature	- 40°C to +105°C
Processing temperature	+250°C +0/-5°C for 5sec.
Contact material *(RoHS compliant)*	Phosphor Bronze
Insulator material *(RoHS compliant)*	LCP UL 94 V-0

Application and Features

Mating with 1.27mm pitch Female Headers BS2-xxx-H45B- & -H45P-55/11 (page 33) as “board to board” connection.

No ejection latches for space saving.

How to order

SLS - xxx - Xxxx - 55/11 X

Nbr of pins	Style		Plating	Packing Option
010 to **100**	**H610** Low Profile		**55** = Gold other platings on request	**D** = Tube packing; with “PickUp Cap” **E** = Reel packing; with “PickUp Cap”
	Raised Type	DIM “**A**”		
	HP20	15.00 mm (standard)		
	HP21	18.00 mm		
	HP22	8.50 mm		
	other dimensions on request			

1.27mm pitch Box Header

-THT- straight, right angle & - SMT -

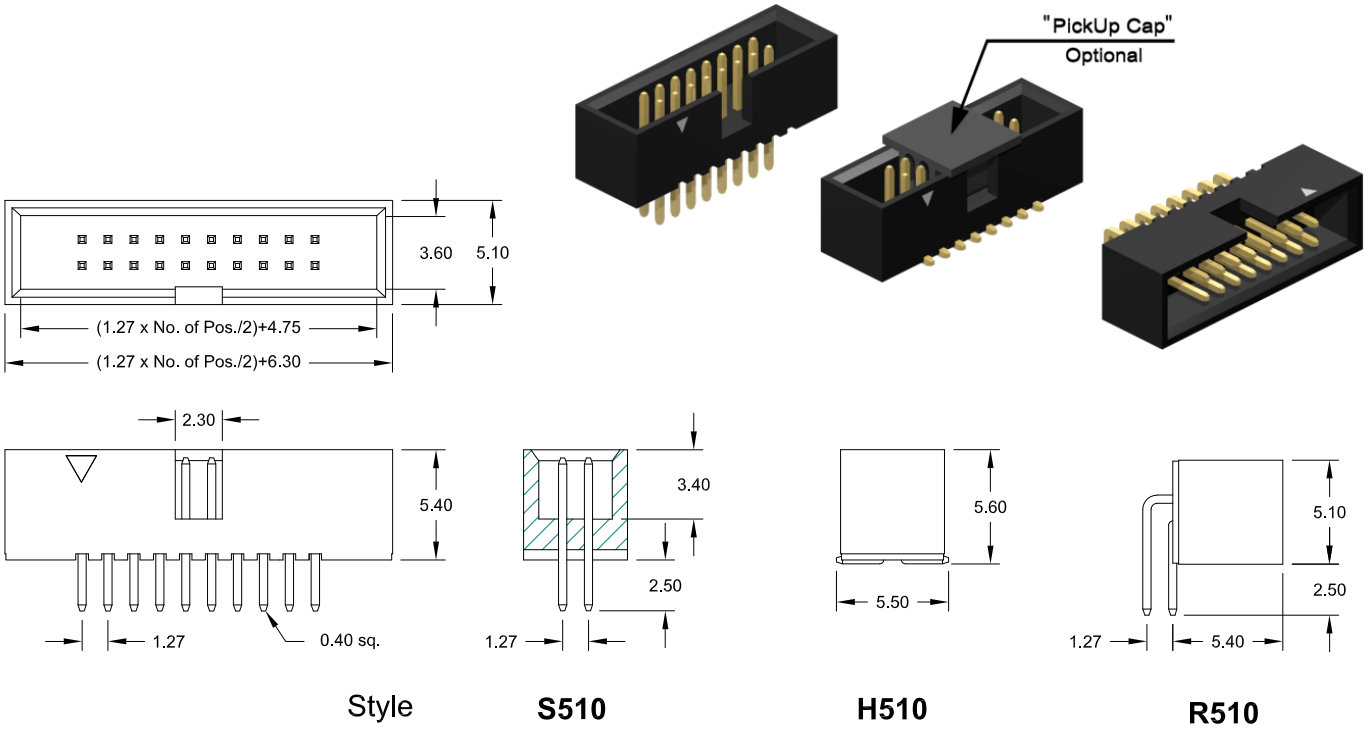

Style **S510** **H510** **R510**

Application and Features

- ***Standard:***
  Tray packing for S510 & R510 Style
  Tube packing for H510 Style
- Designed to mate with IDC female connector IDS-xxx-W050-55/P
- Reliable flat cable to PCB connection
- No ejection latches for space saving

PCB Hole and Surface Mount Layout

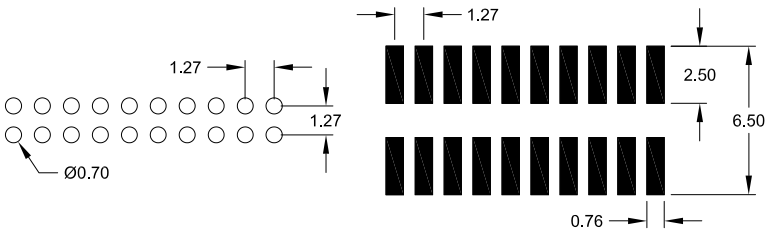

Specifications

Current rating	1 A
Insulation resistance	1000 MΩ min.
Withstanding voltage	500 V AC

Operating temperature	- 40°C to +105°C
Processing temperature (SMT)	+250°C +0/-5°C for 5sec.
Contact material *(RoHS compliant)*	Copper Alloy
Insulator material *(RoHS compliant)*	LCP UL 94 V-0

How to order

SLS - xxx - X 510 - 55/11 (X)

Nbr of pins	Pin Style	Plating	Option only for - H510 - Style
010; 012; 014; 016 **020; 024; 026; 028** **030; 034; 040; 044** **050; 060; 064; 068** **080; 100**	**S** = straight **R** = right angle **H** = SMT	**55** = Gold other platings on request	**A** = Tube packing; with "PickUp Cap" **B** = Reel packing; with "PickUp Cap"

1.27mm pitch Female Header
- THT - dual row straight & right angle

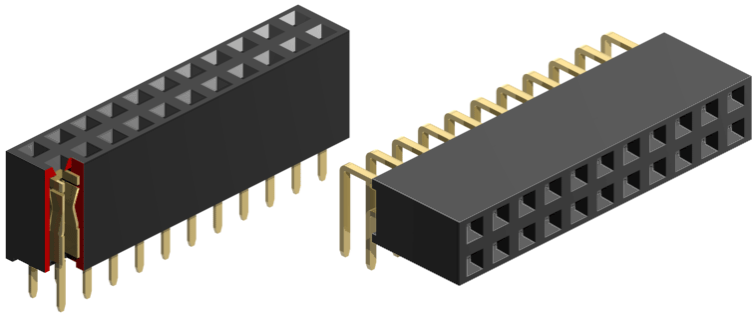

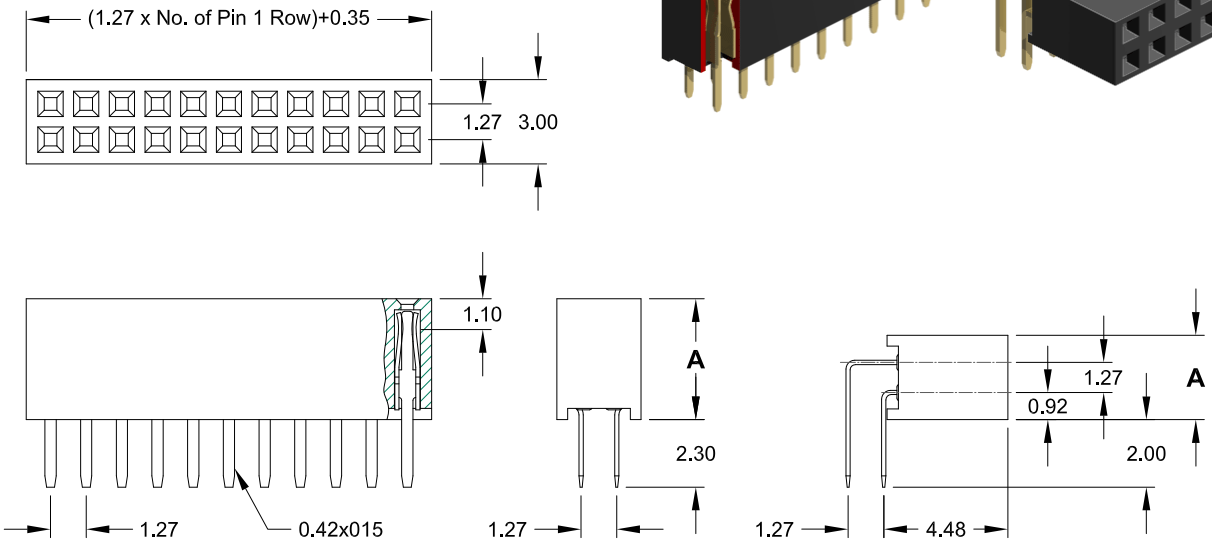

Style **S340** **R430**

Application and Features

- 3.40 or 4.40mm height above board straight type
- Hi-rel dual beam contact assures reliable PC-Board connections
- Accepts 0.40mm square pins
- Stand-off's facilitate post solder cleaning
- Side stackable

PCB Hole Layout

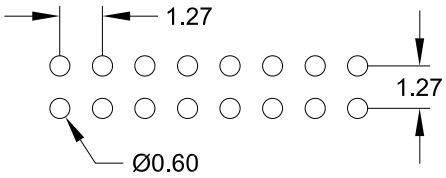

Specifications

Current rating	1 A
Insulation resistance	1000 MΩ min.
Contact resistance	20 mΩ max.
Withstanding voltage	500 V AC

Operating temperature		- 40°C to +105°C
Contact material	*(RoHS compliant)*	Phosphor Bronze
Insulator material	*(RoHS compliant)*	LCP UL 94 V-0

How to order

BL2 - xxx - X xxx - 55/11

Nbr of contacts	Style		DIM "A"
006 to **100**	**S340**	straight	3.40 mm
004 to **100**	**S430**	straight	4.40 mm
004 to **100**	**R430**	right angle	3.10 mm

Plating
55 = Gold
other platings on request

1.27mm pitch Female Header

-THT- 1.27mm x 2.54mm dual row

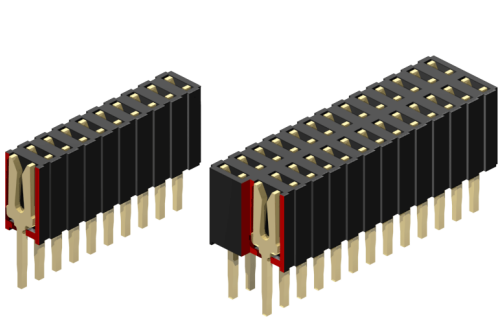

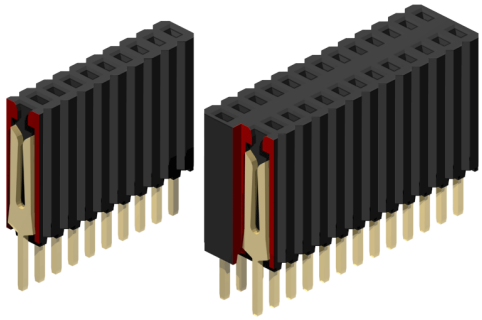

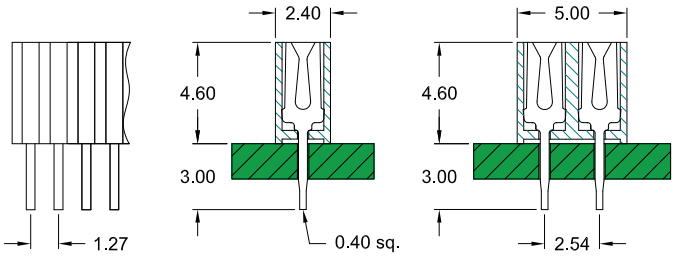

Style **S460**

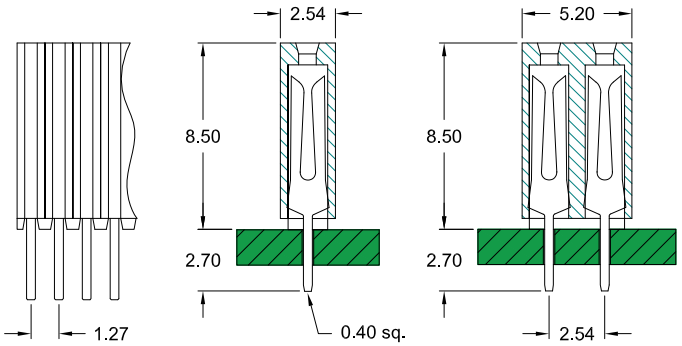

Style **S850**

Specifications

Current rating	1 A
Insulation resistance	1000 MΩ min.
Contact resistance	20 mΩ max.
Withstanding voltage	500 V AC
Operating temperature	- 40°C to +105°C
Contact material *(RoHS compliant)*	Phosphor Bronze
Insulator material *(RoHS compliant)*	PA9T UL 94 V-0

PCB Hole Layout

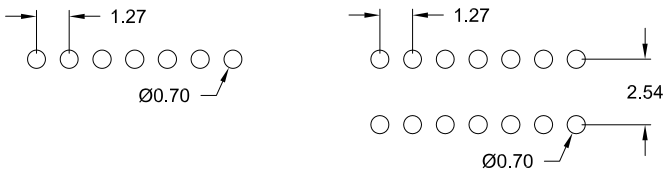

Application and Features

Standard & low profile types

Hi-rel fork contact design

Mates with 0.46mm square or round Pin Header

How to order

BL x - xxx - S xxx - 55/1

Rows	Nbr of contacts	Style (height above PCB)	Plating
1 = single row	single row = **002** to **050**	**460** = 4.60 mm	**55** = Gold
2 = dual row	dual row = **004** to **100**	**850** = 8.50 mm	other platings on request

1.27mm pitch Female Header
- THT- side entry

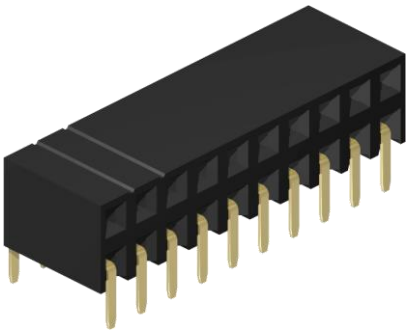

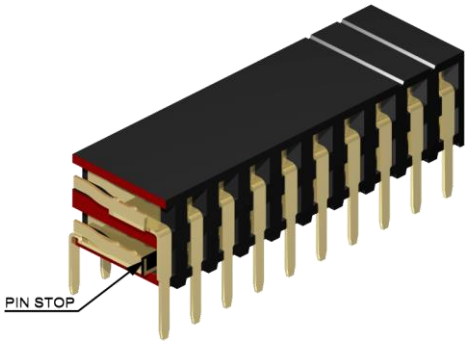

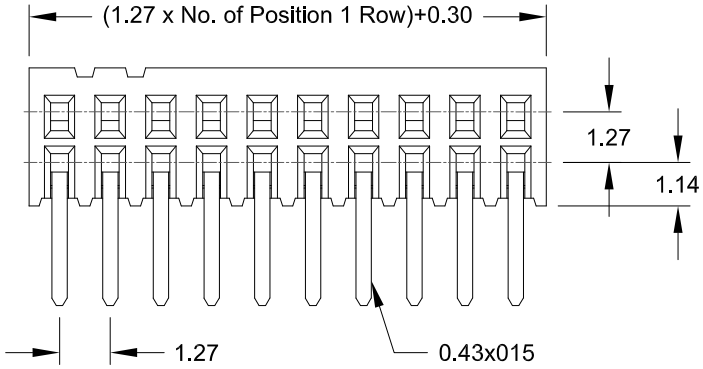

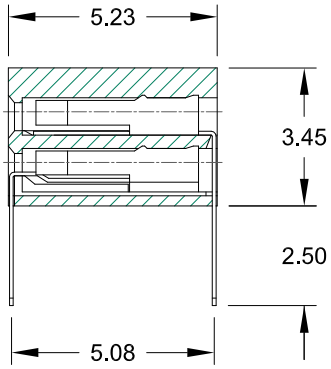

Application and Features

- ***Standard: Tube packing***
- Hi-rel dual beam contact with "Pin Stop" assures reliable connections
- Accepts 0.40mm square pins; Pin Header 1.27mm x 1.27mm
- 3.45mm height above board
- Stand-off's facilitate post solder cleaning

PCB Hole Layout

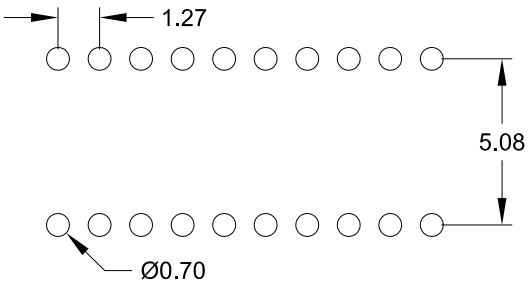

Specifications

Current rating	1 A
Insulation resistance	1000 MΩ min.
Contact resistance	20 mΩ max.
Withstanding voltage	500 V AC

Operating temperature	- 40°C to +105°C
Contact material *(RoHS compliant)*	Phosphor Bronze
Insulator material *(RoHS compliant)*	PA6T UL 94 V-0

How to order

BH2 - xxx - R345 - 55/11

Nbr of contacts
004 to **080**

Plating
55 = Gold
other platings on request

1.27mm x 2.54mm pitch Female Header

- SMT - dual row 6.00mm profile

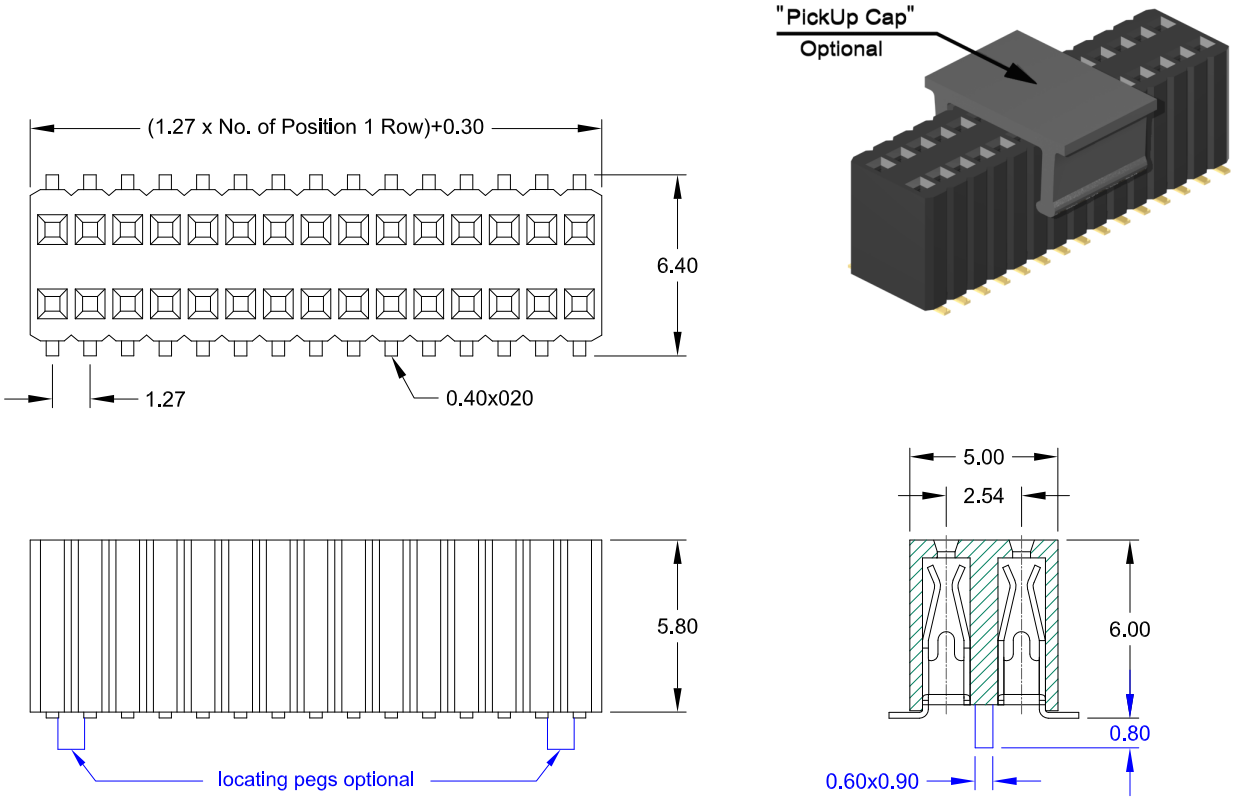

Specifications

Current rating	1 A
Insulation resistance	1000 MΩ min.
Contact resistance	20 mΩ max.
Withstanding voltage	500 V AC
Operating temperature	- 40°C to +105°C
Processing temperature	+250°C +0/-5°C for 5sec.
Contact material *(RoHS compliant)*	Phosphor Bronze
Insulator material *(RoHS compliant)*	PA6T UL 94 V-0

PCB Surface Mount & Hole Layout

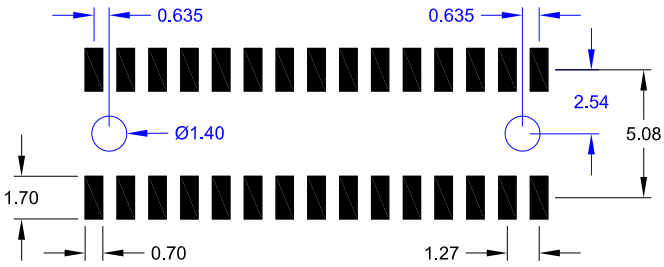

Application and Features

Standard: Tube packing, without "locating pegs" and without "PickUp Cap"

Hi-rel inner contact design, mates with 0.46 mm square Pin Headers

How to order

BS2 - xxx - H600 - 55/1 X

Nbr of contacts	Plating	Options
006 to **100**	**55** = Gold	**without "locating pegs"** **A** = Tube packing; with „PickUp Cap" **B** = Reel packing; with „PickUp Cap" **with "locating pegs"** **C** = Tube packing; without „PickUp Cap" **D** = Tube packing; with „PickUp Cap" **E** = Reel packing; with „PickUp Cap"

1.27mm pitch Female Header

- SMT - single row 4.50mm profile

RoHS compliant

E-tec Interconnect

Foot Style

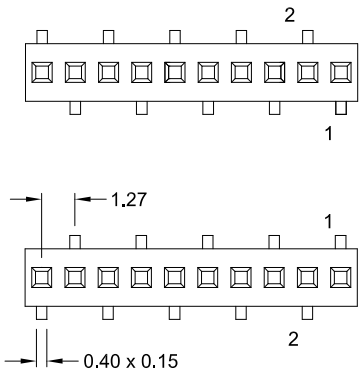

450

451

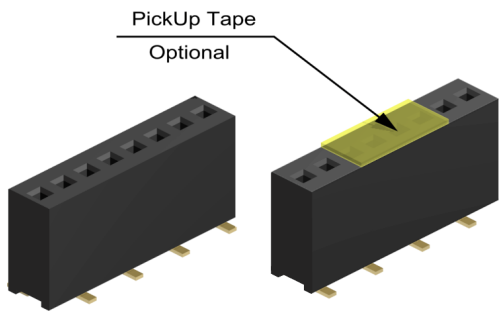

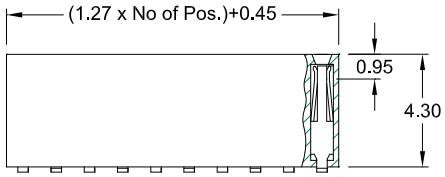

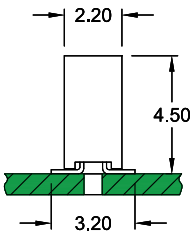

Application and Features

- ***Standard:***
  Tube packing, without "PickUp Tape"
- Also available with "PickUp Tape" (Mylar) for automatic suck assembly to the PCB
- Low profile, 4.50mm height Type. Hi-rel dual beam contacts.
- Mating with 1.27mm pitch, 0.40mm square Pin Headers.
- Through Board mating possible

PCB Surface Mount & Hole Layout

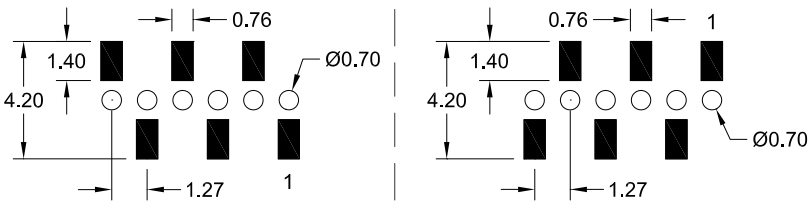

Foot Style: **450** **451**

Specifications

Current rating	1 A	Operating temperature	- 40°C to +105°C
Insulation resistance	1000 MΩ min.	Processing temperature	+250°C +0/-5°C for 5sec.
Contact resistance	20 mΩ max.	Contact material *(RoHS compliant)*	Phosphor Bronze
Withstanding voltage	500 V AC	Insulator material *(RoHS compliant)*	PA9T UL 94 V-0

How to order

BS1 - xxx - H xxx - 55/11 XX

Nbr of contacts	Foot Style	Plating	Packing and "PickUp Tape" Option
003 to **050**	**450** Pls. choose **450** Style if odd pin count. **451** *Foot style see above detail*	**55** = Gold	**AT** = Tube packing; with "PickUp Tape" **BT** = Reel packing; with "PickUp Tape"

1.27mm pitch Female Header

- SMT - dual row 4.50mm profile

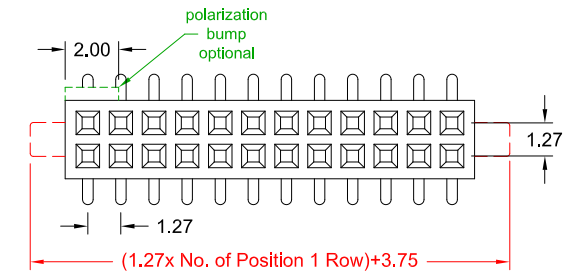

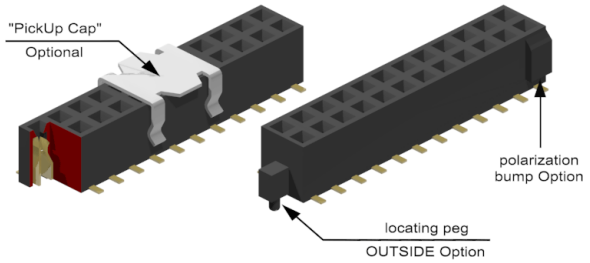

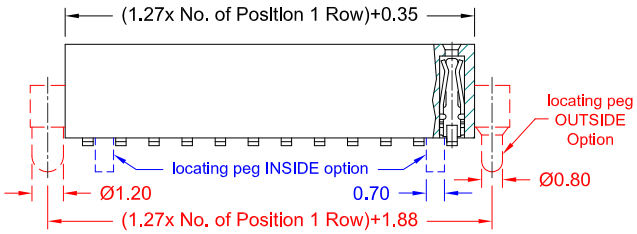

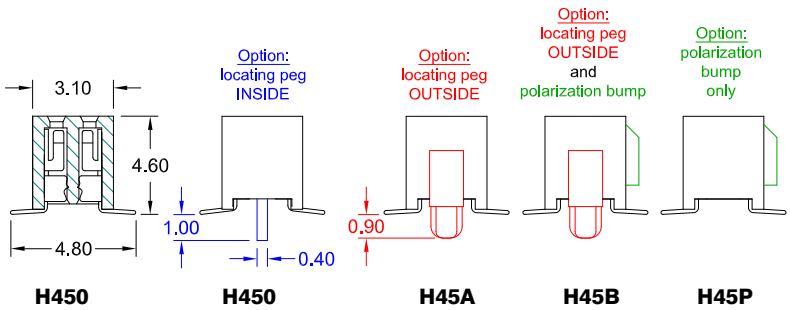

PCB Surface Mount Layout Style **"H450" & "H45P"**

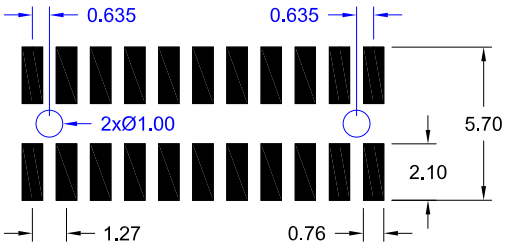

PCB Surface Mount Layout Style **"H45A" & "H45B"**

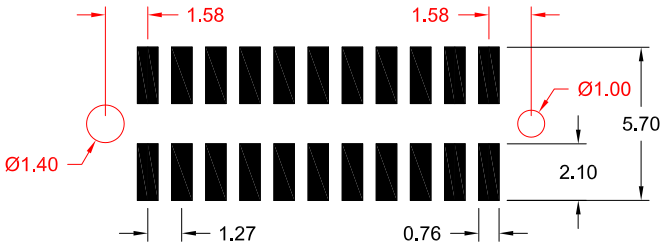

Specifications

Current rating	1 A	Operating temperature	- 40°C to +105°C
Insulation resistance	1000 MΩ min.	Processing temperature	+250°C +0/-5°C for 5sec.
Contact resistance	20 mΩ max.	Contact material *(RoHS compliant)*	PhBz (Gold flash plated)
Withstanding voltage	300 V AC	Insulator material *(RoHS compliant)*	LCP UL 94 V-0

Application and Features

Standard: Tube packing without "locating pegs", without "PickUp Cap" and without polarization bump

Also available with "PickUp Cap" for automatic suck assembly to the PCB

Medium profile, 4.50mm height Type with Hi-rel dual beam contacts

Mating with 1.27mm pitch Box Header SLS-xxx-H610- & -HP2x-55/11 (page 26), or 1.27mm pitch 0.40mm square or round Pin Headers

How to order

BS2 - xxx - H xxx - 55/11 X

Nbr of contacts	Style	Options
008 to **100** **004** to **100** only BS2-xxx-H450-55/11 BS2-xxx-H450-55/11A BS2-xxx-H450-55/11B	**450** = without & with inside locating pegs **45A** = with outside locating pegs **45B** = with outside locating pegs & polarization bump **45P** = with polarization bump; without locating pegs	**See below**

Order Code Options:

without "locating pegs"

BS2-xxx-H450-55/11	=	Tube packing;	w/o „PickUp Cap"
BS2-xxx-H45P-55/11	=	Tube packing;	w/o „PickUp Cap"
BS2-xxx-H450-55/11**A**	=	Tube packing;	with „PickUp Cap"
BS2-xxx-H45P-55/11**A**	=	Tube packing;	with „PickUp Cap"
BS2-xxx-H450-55/11**B**	=	Reel packing;	with „PickUp Cap"
BS2-xxx-H45P-55/11**B**	=	Reel packing;	with „PickUp Cap"

with "locating pegs"

BS2-xxx-H450-55/11**C**	=	Tube packing;	w/o „PickUp Cap"
BS2-xxx-H450-55/11**D**	=	Tube packing,	with „PickUp Cap"
BS2-xxx-H45A-55/11**D**	=	Tube packing;	with „PickUp Cap"
BS2-xxx-H45B-55/11**D**	=	Tube packing;	with „PickUp Cap"
BS2-xxx-H450-55/11**E**	=	Reel packing;	with „PickUp Cap"
BS2-xxx-H45A-55/11**E**	=	Reel packing;	with „PickUp Cap"
BS2-xxx-H45B-55/11**E**	=	Reel packing;	with „PickUp Cap"

1.27mm pitch Female Header

- SMT - dual row 3.60mm profile

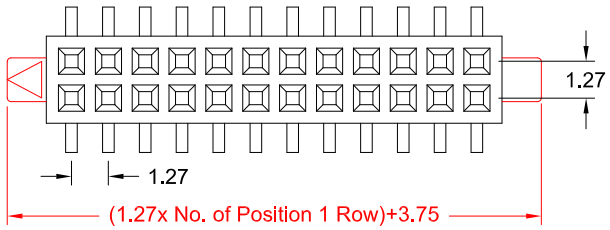

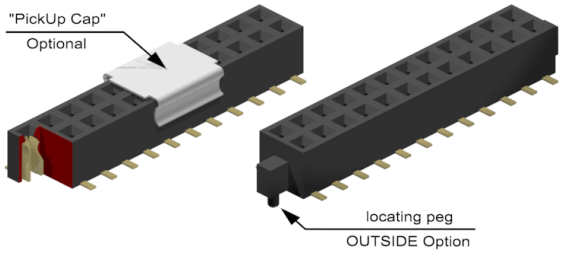

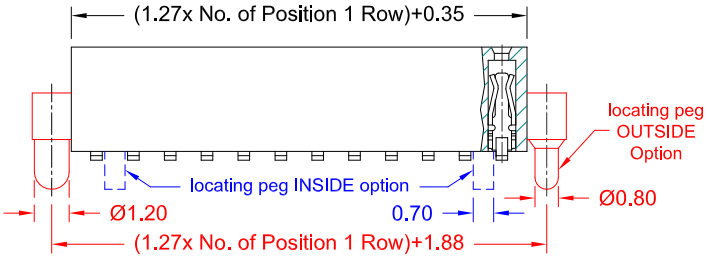

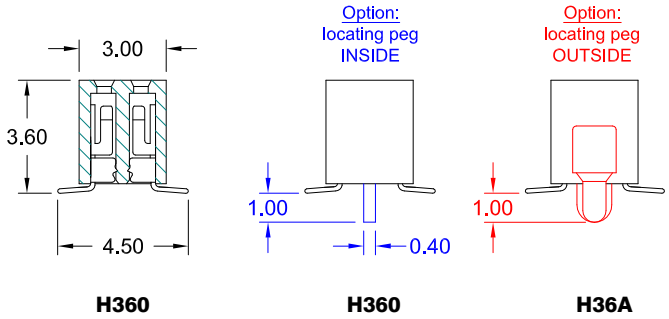

PCB Surface Mount Layout Version "H360"

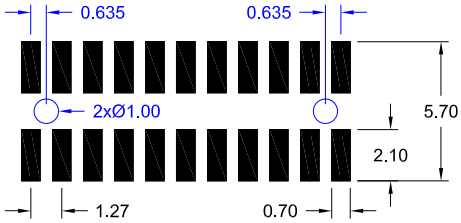

PCB Surface Mount Layout Version "H36A"

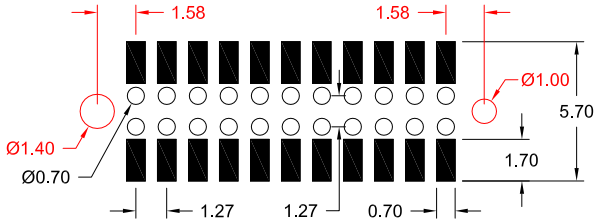

PCB Surface Mount Layout Version "H360" if through Board mating

!! only possible without inside locating pegs !!

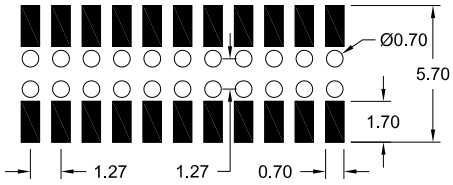

Application and Features

- ***Standard: Tube packing, without locating pegs and without "PickUp Cap"***
- Also available with "PickUp Cap" for automatic suck assembly to the PCB
- Low profile, 3.60mm height Type. Hi-rel dual beam contacts.
- Mating with 1.27mm x 1.27mm pitch, 0.40mm square Pin Headers.
- Through Board mating possible

SPECIFICATIONS

Current rating	1 A	Operating temperature	- 40°C to +105°C
Insulation resistance	1000 MΩ min.	Processing temperature	+250°C +0/-5°C for 5sec.
Contact resistance	20 mΩ max.	Contact material *(RoHS compliant)*	PhBz (Gold flash plated)
Withstanding voltage	300 V AC	Insulator material *(RoHS compliant)*	LCP UL 94 V-0

How to order

BS2 - xxx - H xxx - 55/11 X

Nbr of contacts	Style	Options
006 to **100**	**360** = without & with inside locating pegs **36A** = with outside locating pegs	**See below**

Order Code Options

without "locating pegs"

BS2-xxx-H360-55/11	=	Tube packing; w/o „PickUp Cap"
BS2-xxx-H360-55/11A	=	Tube packing; with „PickUp Cap"
BS2-xxx-H360-55/11B	=	Reel packing; with „PickUp Cap"

with "locating pegs"

BS2-xxx-H360-55/11C	=	Tube packing; w/o „PickUp Cap"
BS2-xxx-H360-55/11D	=	Tube packing; with „PickUp Cap"
BS2-xxx-H36A-55/11D	=	Tube packing; with „PickUp Cap"
BS2-xxx-H360-55/11E	=	Reel packing; with „PickUp Cap"
BS2-xxx-H36A-55/11E	=	Reel packing; with „PickUp Cap"

1.27mm pitch Female Header - SMT- single row 2.10 & 2.20mm profile

RoHS compliant

E-tec Interconnect

Top entry

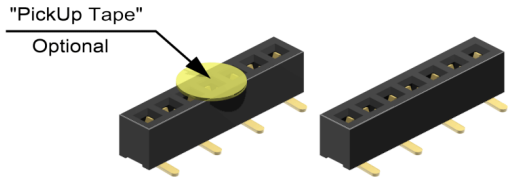

Bottom entry

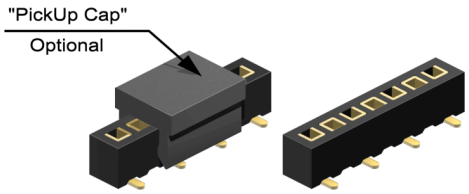

Foot Style **T220** **T221**

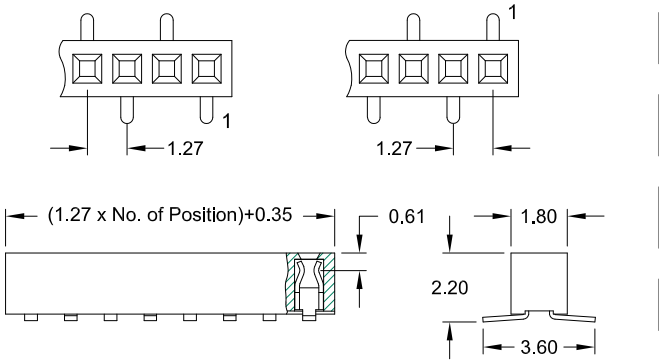

Foot Style **B210** **B211**

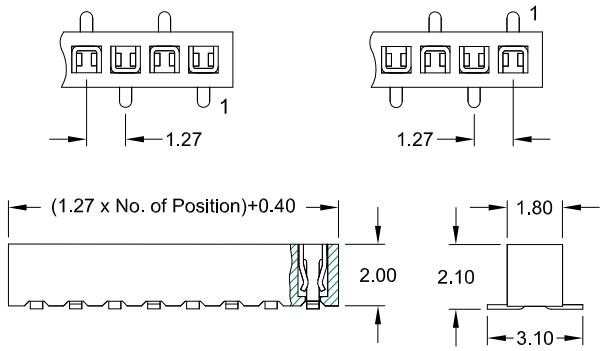

PCB Surface Mount & Hole Layout

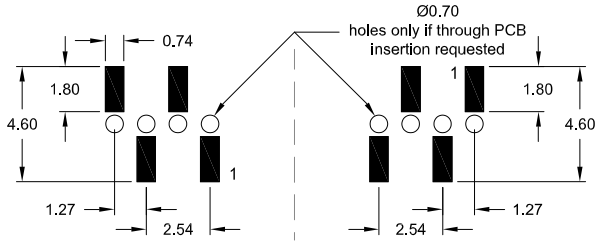

Foot Style: **T220** **T221**

PCB Surface Mount & Hole Layout

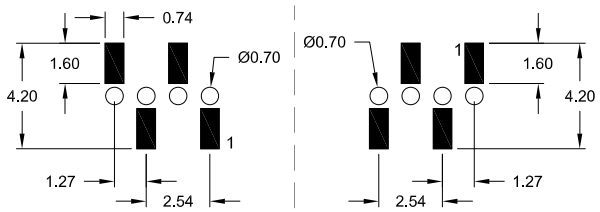

Foot Style: **B210** **B211**

Application and Features

- ***Standard: Tube packing, without "PickUp Cap" Option***
- Also available "Reel" packing.
- Low profile, 2.10 & 2.20mm height. Hi-rel dual beam contacts.
- Mate with 1.27mm pitch 0.40mm square or round Pin Headers.
- Designed for board to board small spacing interconnection.

Specifications

Current rating	1 A
Insulation resistance	1000 MΩ min
Contact resistance	20 mΩ max.
Withstanding voltage	500 V AC
Operating temperature	- 40°C to +105°C
Processing temperature	+250°C +0/-5°C for 5sec.
Contact material *(RoHS compliant)*	Phosphor Bronze
Insulator material *(RoHS compliant)*	TB21x = PA6T UL 94 V-0 TB22x = PA9T UL 94 V-0

How to order

BS1 - xxx - X xxx - 55/11 XX

Nbr of contacts	Foot Style	Plating	Packing and „PickUp Cap" Option
Top Entry (T22x) **003** to **040** Bottom Entry(B21x) **003** to **050**	Top Entry **T220 ; T221** Bottom Entry **B210 ; B211** Pls. choose **T220** or **B210** style if odd pin count. Foot Style see above detail	**55** = Gold	**if B210 & B211 Type** **A** = Tube packing; with „PickUp Cap" **B** = Reel packing; with „PickUp Cap" **if T220 & T221 Type** **AT** = Tube packing; with „PickUp Tape" **BT** = Reel packing; with „PickUp Tape"

When using this female connector as a bottom entry connector, we recommend that the Pin Header pins protrude by around 2.00mm above the surface of the female connector after assembly. This will avoid any risk of separation of the Pin Header from the Female Header during shock and vibration.

1.27mm pitch Female Header - SMT-
Top & Bottom Entry 2.20mm profile

RoHS compliant

E-tec Interconnect

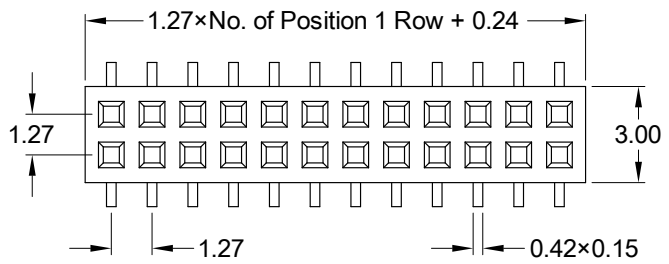

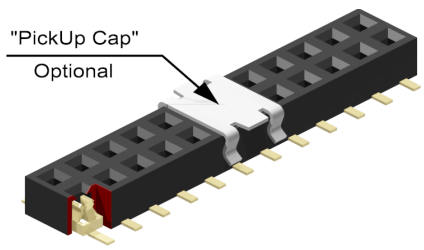

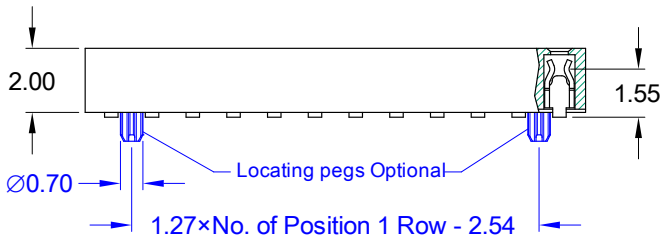

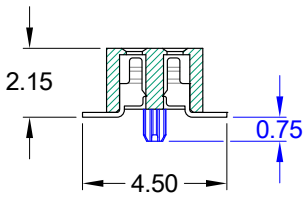

Application and Features

- **Standard: Tube packing, without locating pegs and without "PickUp Cap"**
- Also available "Reel" packing.
- Low profile, 2.20mm height. Hi-rel dual beam contacts.
- Mating with 1.27mm x 1.27mm pitch 0.40mm square or round Pin Headers.
- Designed for board to board small spacing interconnection.

PCB Surface Mount & Hole Layout

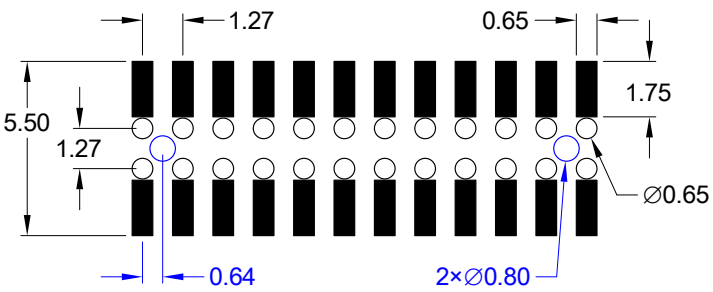

Specifications

Current rating	1 A
Insulation resistance	1000 MΩ min.
Contact resistance	20 mΩ max.
Withstanding voltage	500 V AC

Operating temperature	- 40°C to +105°C
Processing temperature	+250°C +0/-5°C for 5sec.
Contact material *(RoHS compliant)*	Phosphor Bronze
Insulator material *(RoHS compliant)*	LCP UL 94 V-0

How to order

BS2 - xxx - TB22 - 55/11 X

Nbr of contacts
006 to **080**

Plating
55 = Gold

Options
without "locating pegs"
A = Tube packing; with „PickUp Cap"
B = Reel packing; with „PickUp Cap"
with "locating pegs"
C = Tube packing; without „PickUp Cap"
D = Tube packing; with „PickUp Cap"
E = Reel packing; with „PickUp Cap"

When using this female connector as a bottom entry connector, we recommend that the Pin Header pins protrude by around 2.00mm above the surface of the female connector after assembly. This will avoid any risk of separation of the Pin Header from the Female Header during shock and vibration.

1.27mm pitch Female Header
- SMT- side entry

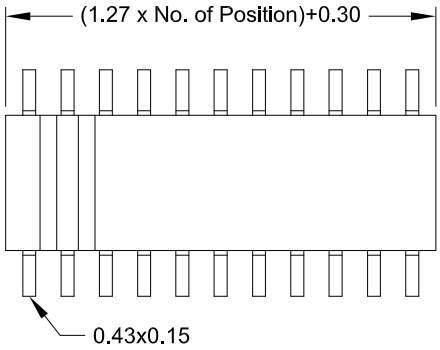

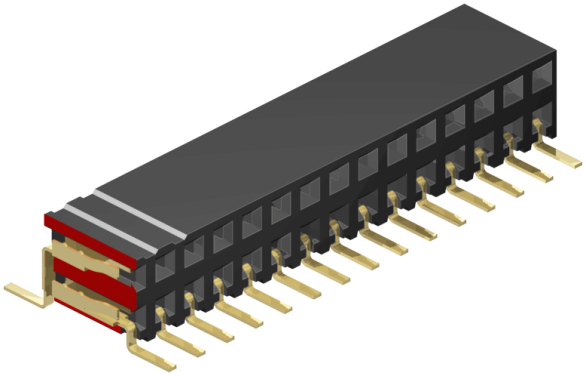

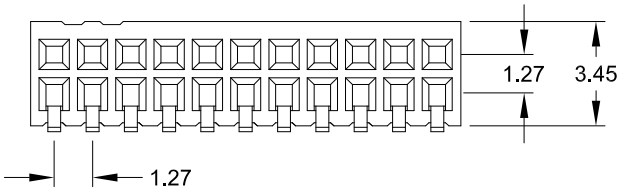

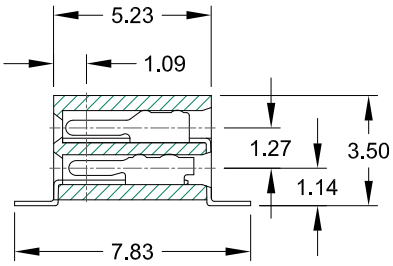

Application and Features

- ***Standard: Tube packing***
- Hi-rel dual beam contact assures reliable PC-Board connections
- Accepts 0.40mm square pins; Pin Header 1.27mm x1.27 mm
- 3.50mm height above board
- Automatic assembly to PCB possible

PCB Surface Mount Layout

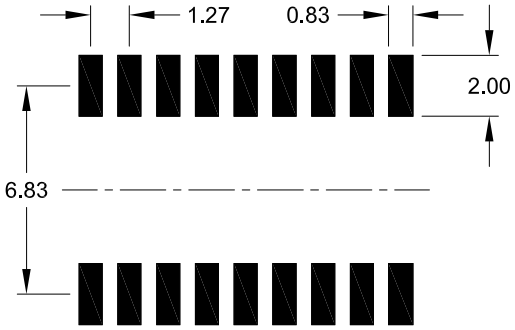

Specifications

Current rating	1 A
Insulation resistance	1000 MΩ min.
Contact resistance	20 mΩ max.
Withstanding voltage	500 V AC

Operating temperature	- 40°C to +105°C
Processing temperature	+250°C +0/-5°C for 5sec.
Contact material *(RoHS compliant)*	Phosphor Bronze
Insulator material *(RoHS compliant)*	LCP UL 94 V-0

How to order

BS2 - xxx - R345 - 55/11 X

Nbr of contacts
006 to **080**

Plating
55 = Gold
other platings on request

Packing Option
M = Tray
T = Tube
R = Reel

1.27mm pitch

IDC – Female Connector

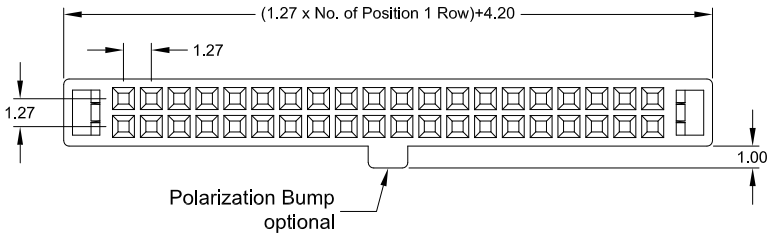

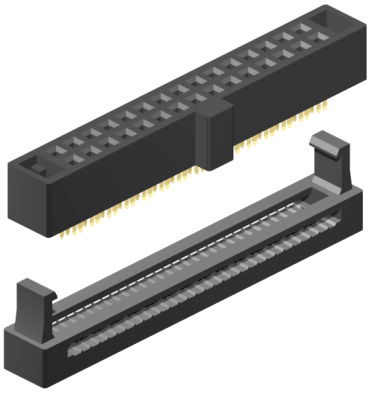

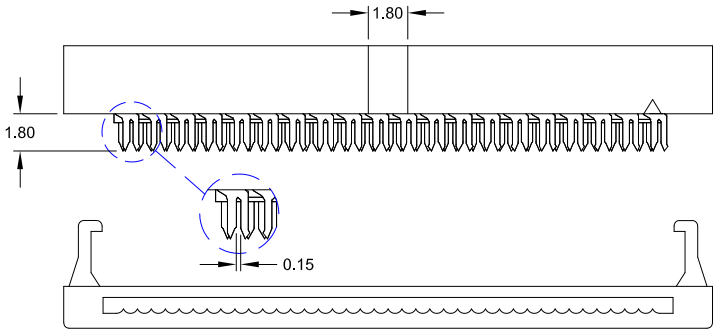

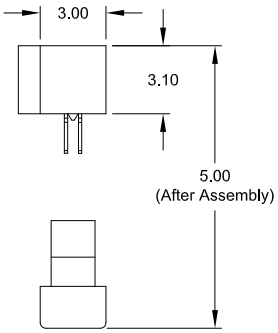

Specifications

Current rating	0.5 A
Contact resistance	30 mΩ max.
Insulation resistance	1000 MΩ min.
Withstanding voltage	250 V AC

Operating temperature		- 40°C to +105°C
Contact material	*(RoHS compliant)*	Phosphor Bronze
Insulator material	*(RoHS compliant)*	PBT black UL 94 V-0

Application and Features

Designed to mate with 0.40mm square pins, Box (Shrouded) Header Type
SLS – xxx – X 510 – 55/11

High Quality dual beam contacts.

Accepts 30 AWG 0.635mm pitch flat ribbon cable.

How to order

IDS - xxx - W050 - 55 /P

Nbr of contacts
006; 008; 010; 012
014; 016; 020; 022
024; 026; 030; 034
036; 040; 044; 050
060; 064; 068; 080

Plating
55 = Gold

Option
/P
if Polarization bump is requested

2.00mm pitch Pin Header

- THT - straight & right angle

RoHS compliant

E-tec Interconnect

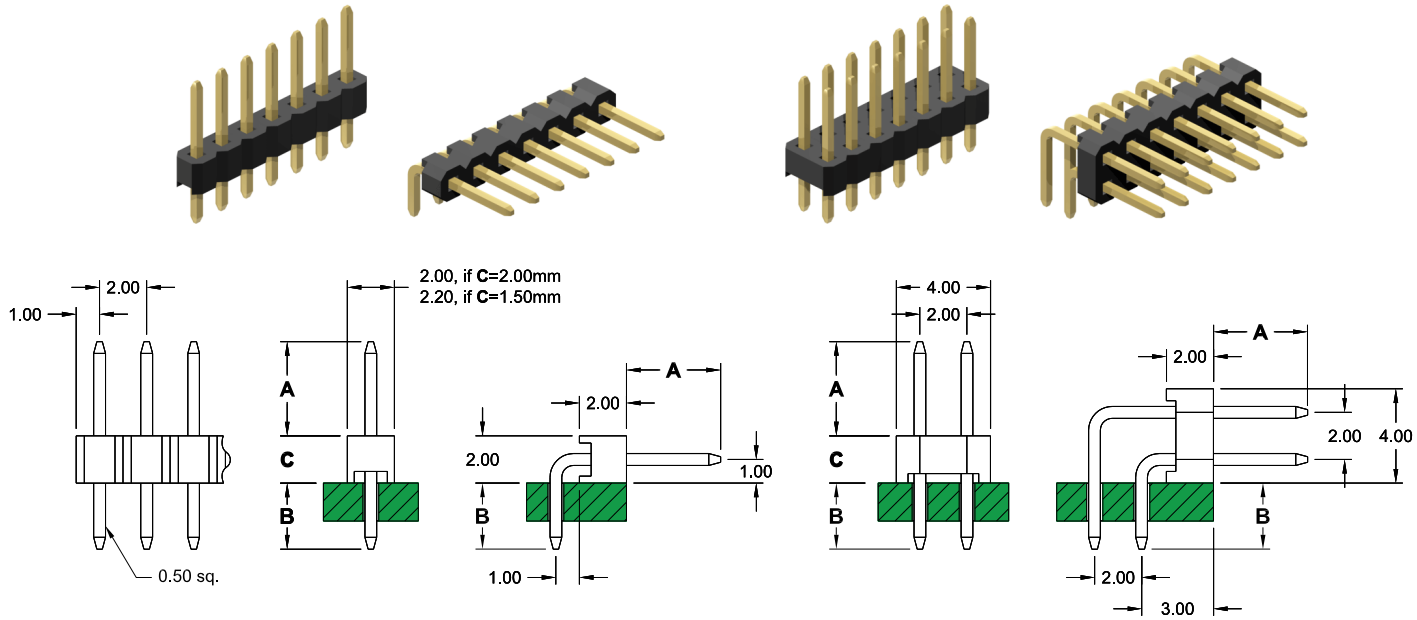

Specifications

Current rating	2 A
Insulation resistance	1000 MΩ min.
Withstanding voltage	500 V AC
Operating temperature	- 40°C to +105°C
Contact material *(RoHS compliant)*	Copper alloy
Insulator material *(RoHS compliant)*	PBT or PA6T UL 94 V-0
	Standard : PBT

PCB Hole Layout

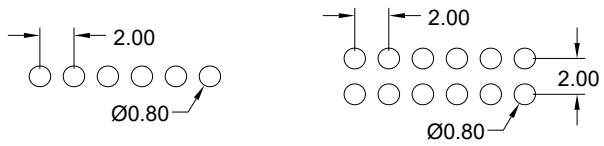

Application and Features

Side and end stackable.
Variable terminal lengths as well as two insulator thicknesses available for the straight type.
Notches for easy breaking.
Straight type with standoff's for post solder cleaning.

How to order

SL x - xxx - X xxx/xx - 55/2

Rows	Nbr of pins
1 = single row	**002** to **040**
2 = dual row	**004** to **080**

Pin Style	DIM "C"	Material Code
straight	2.00 mm	**S** = P.B.T. **N** = PA6T
straight	1.50 mm	**B** = PA6T
right angle	2.00 mm	**R** = P.B.T. **K** = PA6T

Pin code	DIM "A"	DIM "B"
088/01	4.00 mm	2.80 mm
088/02	6.00 mm	2.80 mm
088/03	6.80 mm	3.00 mm
088/04	4.00 mm	4.00 mm
088/05	3.70 mm	5.00 mm
096/00	4.00 mm	2.80 mm
096/01	6.00 mm	2.10 mm
096/02	4.50 mm	4.00 mm
096/03	1.70 mm	8.80 mm
096/04	4.00 mm	2.30 mm
096/05	3.20 mm	3.50 mm
096/06	4.00 mm	4.00 mm
096/07	7.00 mm	2.20 mm
096/08	3.60 mm	3.00 mm
096/09	21.00 mm	2.54 mm
096/10	5.10 mm	3.00 mm
106/00	3.20 mm	3.20 mm
106/01	4.00 mm	2.80 mm
106/02	10.00 mm	2.80 mm
106/03	11.00 mm	2.80 mm
106/04	2.50 mm	2.80 mm
106/05	5.00 mm	2.80 mm
106/06	11.00 mm	2.40 mm
106/07	6.00 mm	2.80 mm

other dimensions on request

Plating
55 = Gold *(standard)*
99 = Tin *(leadfree tin)*
other platings on request

2.00mm pitch Pin Header
- THT - high plastic base

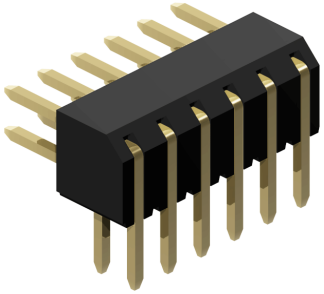

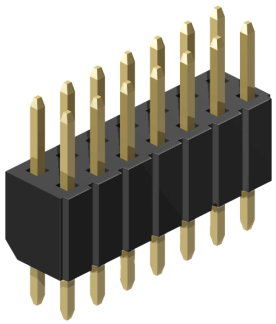

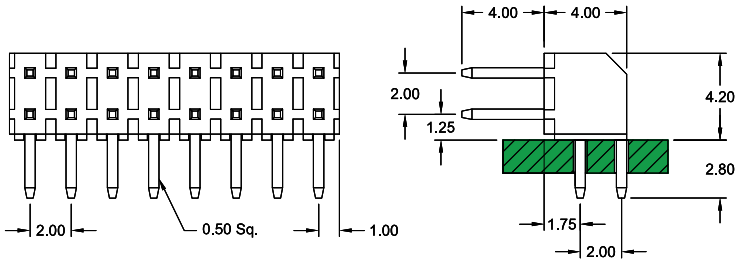

Style **R430**

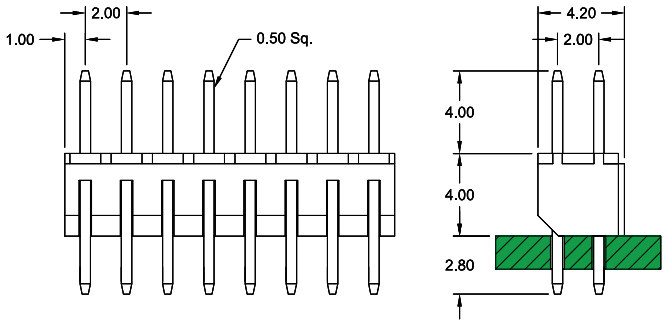

Style **S400**

Specifications

Current rating		2 A
Insulation resistance		1000 MΩ min.
Withstanding voltage		500 V AC
Operating temperature		- 40°C to +105°C
Contact material	*(RoHS compliant)*	Copper alloy
Insulator material	*(RoHS compliant)*	PA6T UL 94 V-0

PCB Hole Layout

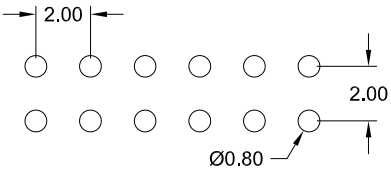

Application and Features

High Base Insulator standoff's facilitate post solder cleaning

Side stackable

Mate with 2.00mm pitch Female and Shunt Connector

How to order

SE2 - xxx - X xxx - xx/2

Nbr of pins
004 to **080**

Pin Style		
S400	=	straight
R430	=	right angle

Plating		
55	=	Gold
95	=	Tin/Gold *(tin leadfree)*

other platings on request

2.00mm pitch Pin Header - THT -

"PC 104+ Type" Quad Row, 160 pins max.

RoHS compliant

E-tec Interconnect

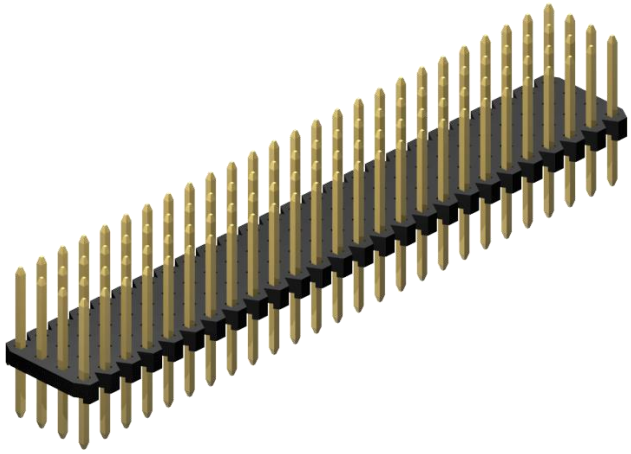

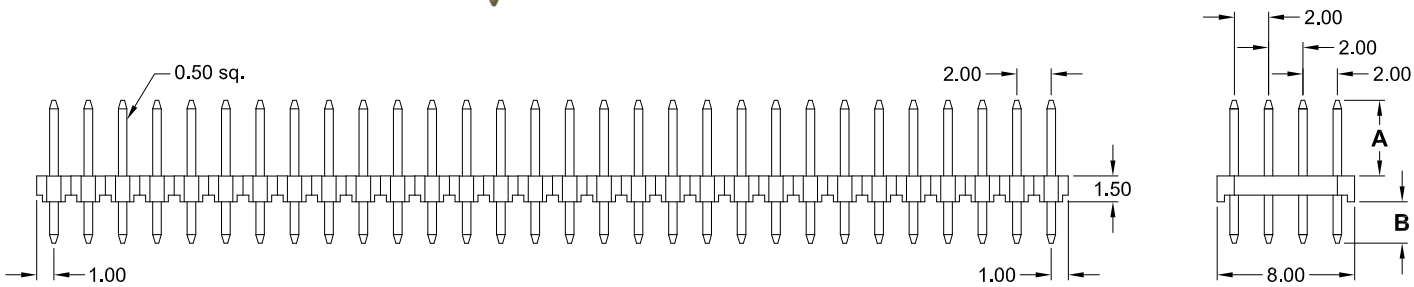

Specifications

Current rating	2 A
Insulation resistance	1000 MΩ min.
Withstanding voltage	500 V AC
Operating temperature	- 40°C to +105°C
Contact material *(RoHS compliant)*	Copper alloy
Insulator material *(RoHS compliant)*	PA6T UL 94 V-0

PCB Hole Layout

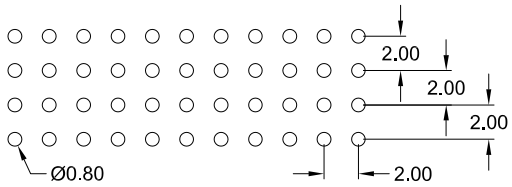

Application and Features

Designed for "board to board" small spacing interconnection

Variable terminal length available

With standoff's for post solder cleaning

Mate with Female Header BL4 – xxx – S630/x – xx/2

How to order

SL4 - xxx - S xxx/x - 55/2

Nbr of pins
008 to **160**

Pin code	DIM "**A**"	DIM "**B**"
830/0	4.40 mm	2.40 mm
830/1	8.60 mm	3.60 mm
830/2	3.20 mm	3.50 mm
830/3	12.00 mm	2.40 mm
830/4	7.40 mm	2.70 mm
other dimensions on request		

Plating
55 = Gold
other platings on request

2.00mm pitch Board Spacer
- THT - single & dual row

RoHS compliant

E-tec Interconnect

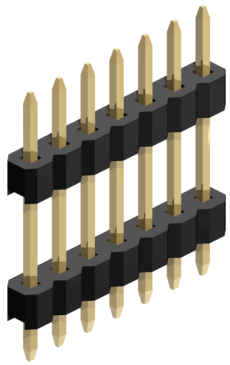

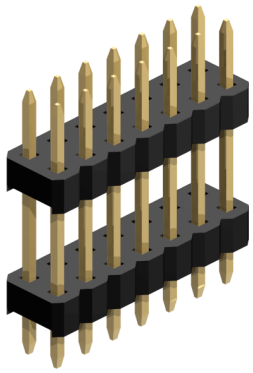

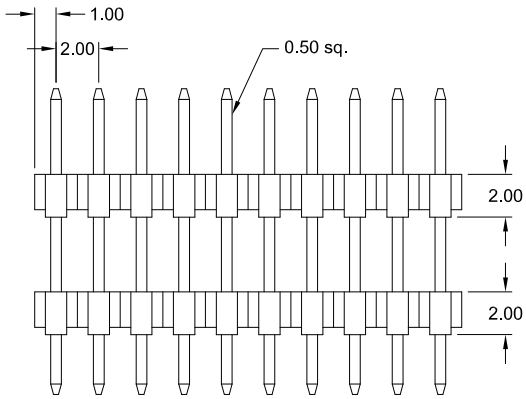

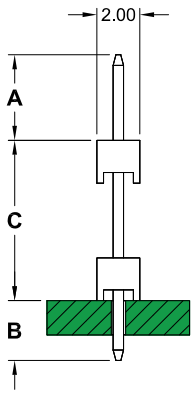

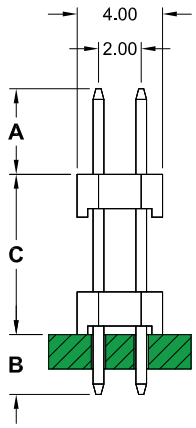

PCB Hole Layout

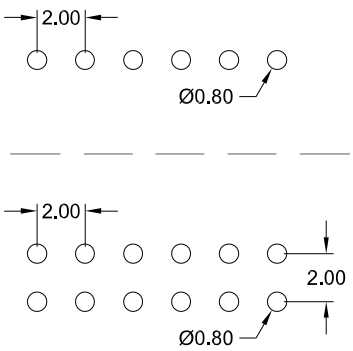

Specifications

Current rating	2 A
Insulation resistance	1000 MΩ min.
Withstanding voltage	500 V AC
Operating temperature	- 40°C to +105°C
Contact material *(RoHS compliant)*	Copper alloy
Insulator material *(RoHS compliant)*	PBT or PA6T, UL 94 V-0 *Standard :* PBT

Pin code	DIM "A"	DIM "B"	DIM "C"
143/02	6.80 mm	2.80 mm	4.70 mm
104/01	2.70 mm	2.70 mm	5.00 mm
136/02	5.30 mm	3.20 mm	5.10 mm
191/01	9.30 mm	4.30 mm	5.50 mm
117/01	2.80 mm	2.80 mm	6.10 mm
143/01	4.00 mm	2.80 mm	7.50 mm
143/03	2.40 mm	3.90 mm	8.00 mm
150/01	4.00 mm	2.50 mm	8.50 mm
163/01	4.00 mm	2.80 mm	9.50 mm
180/03	5.00 mm	3.00 mm	10.00 mm
170/01	3.00 mm	3.00 mm	11.00 mm
180/02	3.00 mm	3.00 mm	12.00 mm
210/01	6.00 mm	3.00 mm	12.00 mm
260/04	9.00 mm	4.00 mm	13.00 mm
220/01	4.00 mm	2.80 mm	15.25 mm
252/02	5.20 mm	4.20 mm	15.80 mm
300/03	10.00 mm	3.00 mm	17.00 mm
225/01	2.50 mm	2.50 mm	17.50 mm
270/02	4.00 mm	3.00 mm	20.00 mm
410/01	9.00 mm	4.00 mm	28.00 mm
432/01	3.20 mm	3.20 mm	36.80 mm

other dimensions on request

How to order

SP x - xxx - X xxx/xx - 55/2

Rows	Nbr of pins	Insulator	Pin code	Plating
1 = single row	**002** to **040**	**S** = PBT **N** = PA6T PA6T processing temp.: +250°C +0/-5°C for 5sec.	dimension and others see above table	**55** = Gold other platings on request
2 = dual row	**004** to **080**			

2.00mm pitch Pin Header

- SMT - Single & dual row

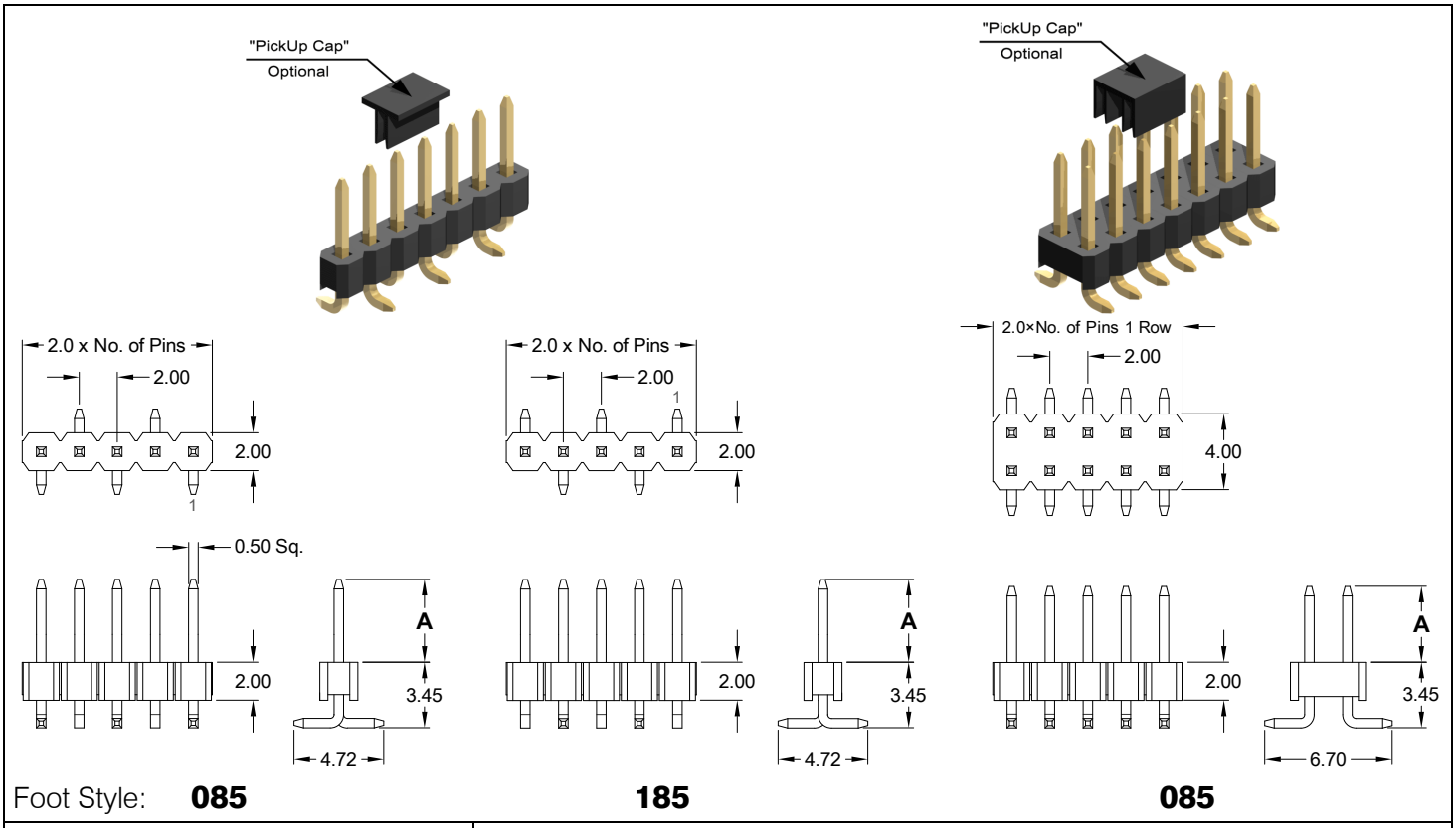

Foot Style: **085** **185** **085**

Application and Features

- ***Standard: Tube packing and without "PickUp Cap"***
- Low Profile Insulator
- Assures reliable PC Board connections
- Mate with Female Header 2.00mm pitch

PCB Surface Mount Layout

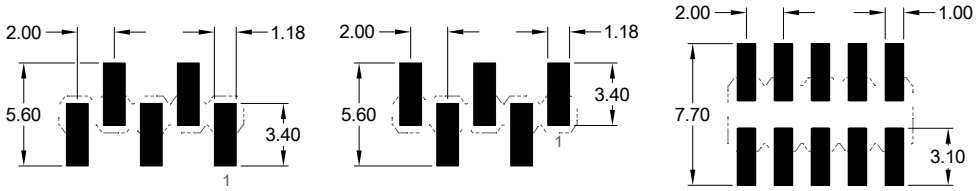

Foot Style: **085** (single row) **185** (single row) **085** (dual row)

Specifications

Current rating	2 A	Operating temperature	- 40°C to +105°C
Insulation resistance	1000 MΩ min.	Processing temperature	+250°C +0/-5°C for 5sec.
Withstanding voltage	500 V AC	Contact material *(RoHS compliant)*	Brass
		Insulator material *(RoHS compliant)*	PA6T UL 94 V-0

How to order

SS x - xxx - H xxx / x - 55/2 X

Rows	Nbr of pins	Foot Style
1 single row	**002** to **040**	**085** **185** Pls. choose **085** Style if odd pin count.
2 dual row	**004** to **080**	**085**

Pin code	DIM "A"
0	4.73 mm
1	6.00 mm
2	13.57 mm
3	6.50 mm
4	8.07 mm
5	7.62 mm
6	9.10 mm
7	10.00 mm
other dimensions on request	

Plating	Packing and „PickUp Cap" Option
55 = Gold	**A** = Tube packing; with „PickUp Cap"
other platings on request	**B** = Reel packing; with „PickUp Cap"

2.00mm pitch

- SMT - Pin Header & Board Spacer

RoHS compliant

E-tec Interconnect

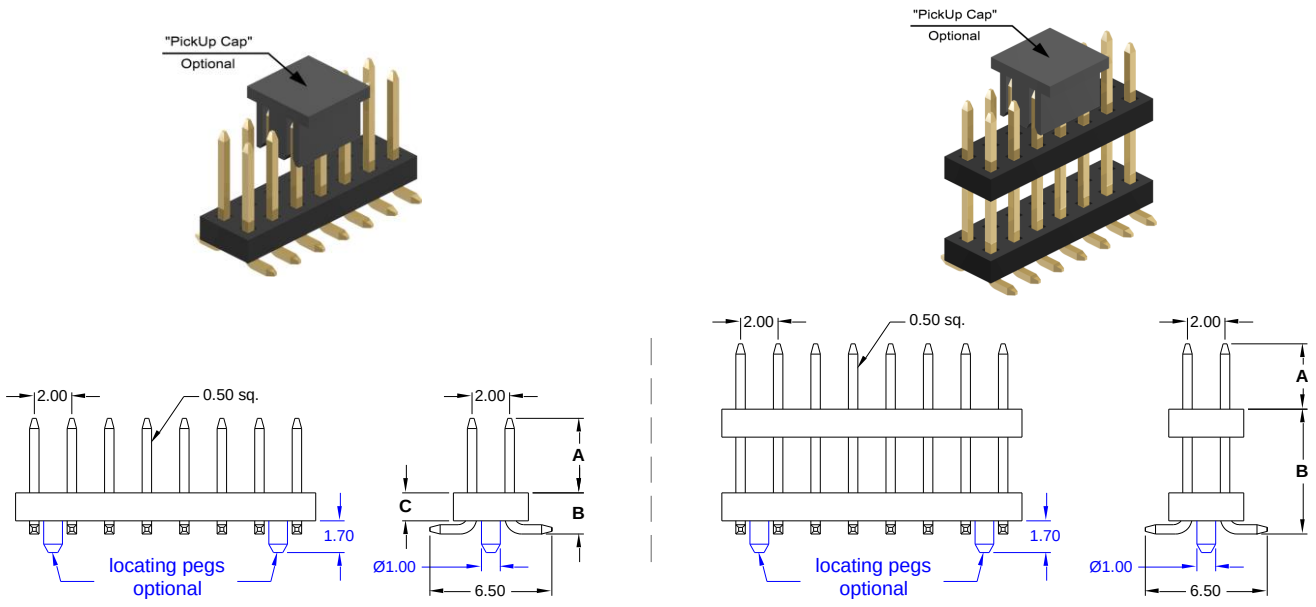

Style **SS2** Style **SP2**

Application and Features

- ***Standard: Tube packing, without "locating pegs" and without "PickUp Cap"***
- Designed for "board to board" spacing
- Variable terminal length available
- Mate with Female Header 2.00 x 2.00mm pitch

PCB Surface Mount Layout

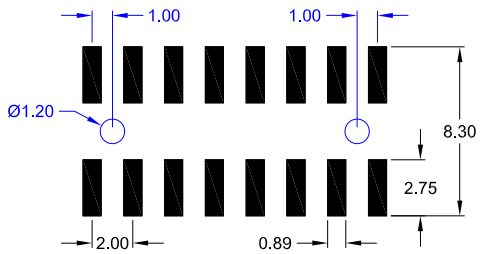

Specifications

Current rating	2 A	Operating temperature	- 40°C to +105°C
Insulation resistance	1000 MΩ min.	Processing temperature	+250°C +0/-5°C for 5sec.
Contact resistance	20 mΩ max.	Contact material *(RoHS compliant)*	Copper alloy
Withstanding voltage	500 V AC	Insulator material *(RoHS compliant)*	PA6T or PA9T UL 94 V-0

How to order

S X 2 - xxx - HX xxx/x - 55/2 X

Style

S Low Profile

P Board Spacer

Nbr of pins

006 to **050**

Material

H = PA6T

HN = PA9T

Pin code	DIM "A"	DIM "B"	DIM "C"
064/0	6.00 mm	2.20 mm	1.50 mm
064/1	4.00 mm	2.20 mm	1.50 mm
064/2	3.50 mm	2.70 mm	2.00 mm
064/3	5.80 mm	2.20 mm	1.50 mm
064/4	3.20 mm	2.20 mm	1.50 mm
064/5	3.60 mm	2.20 mm	1.50 mm
064/6	4.00 mm	2.70 mm	2.00 mm
064/7	13.50 mm	2.65 mm	2.00 mm
064/8	9.50 mm	2.20 mm	1.50 mm
064/9	8.00 mm	2.20 mm	1.50 mm
065/0	6.00 mm	6.00 mm	
065/A	5.40 mm	7.00 mm	
065/4	3.90 mm	8.00 mm	
065/7	7.50 mm	8.50 mm	
065/1	6.00 mm	10.00 mm	
065/2	6.00 mm	12.00 mm	
065/6	9.50 mm	12.00 mm	
065/9	5.00 mm	12.30 mm	
065/8	4.65 mm	12.70 mm	
065/3	4.00 mm	13.33 mm	
065/B	4.50 mm	16.00 mm	
065/5	4.50 mm	17.00 mm	

other dimensions on request

Plating

55 = Gold

other platings on request

Options

without "locating pegs"

A = Tube packing; with "PickUp Cap"

B = Reel packing; with "PickUp Cap"

with "locating pegs"
(if, DIM "C"=1.50mm only)

C = Tube packing; without "PickUp Cap"

D = Tube packing; with "PickUp Cap"

E = Reel packing; with "PickUp Cap"

2.00mm pitch Pin Header - slanted - - SMT - single and dual row

RoHS compliant

E-tec Interconnect

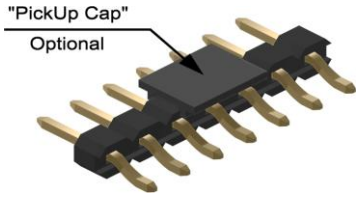

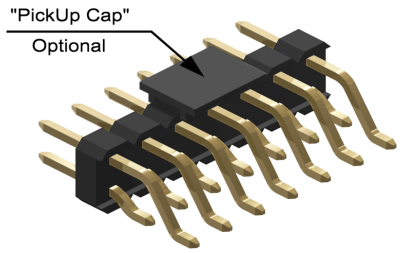

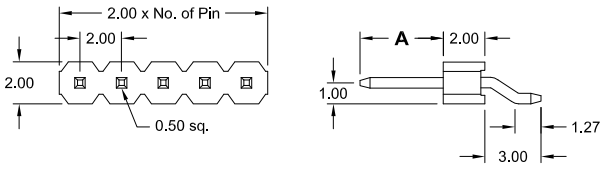

Style **SR1**

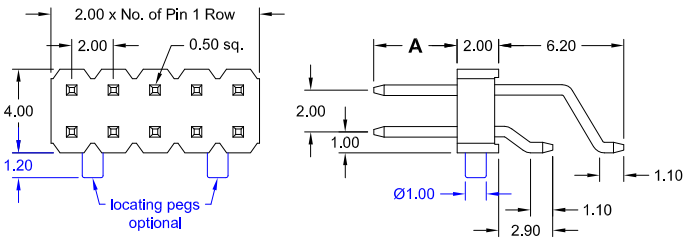

Style **SR2**

PCB Surface Mount Layout single row

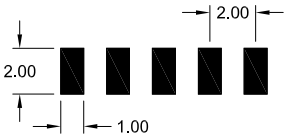

PCB Surface Mount Layout dual row

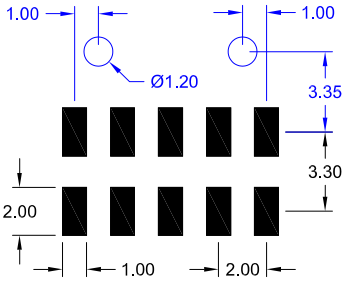

Specifications

Current rating	2 A
Insulation resistance	1000 MΩ min.
Withstanding voltage	500 V AC

Operating temperature		- 40°C to +105°C
Processing temperature		+250°C +0/-5°C for 5sec.
Contact material	*(RoHS compliant)*	Copper alloy
Insulator material	*(RoHS compliant)*	PA6T UL 94 V-0

How to order

SR x - xxx - H xxx/x - 55/2 X

Rows	Nbr of pins	Pin code	DIM "A"
1 = single row	**002** to **040**	**093/ 0**	4.00 mm
		093/ 1	4.45 mm
		093/ 2	3.20 mm
		093/ 3	6.00 mm
2 = dual row	**006** to **080**	**122/ 0**	4.00 mm
		122/ 1	6.00 mm
		122/ 2	4.45 mm
		122/ 3	5.00 mm
		122/ 4	3.20 mm
		122/ 5	3.50 mm
		122/ 6	8.00 mm
		122/ 7	4.80 mm

Plating

55 = Gold

other platings on request

Options

without "locating pegs"

A = Tube packing; with „PickUp Cap"
B = Reel packing; with „PickUp Cap"

with "locating pegs"
(Dual Row Type only)

C = Tube packing; without "PickUp Cap"
D = Tube packing; with "PickUp Cap"
E = Reel packing; with "PickUp Cap"

2.00mm pitch Box Header

- THT - right angle - straight - raised

RoHS compliant

E-tec Interconnect

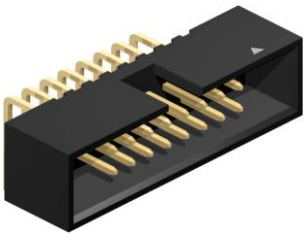

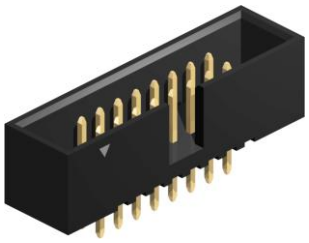

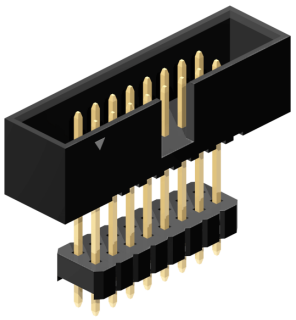

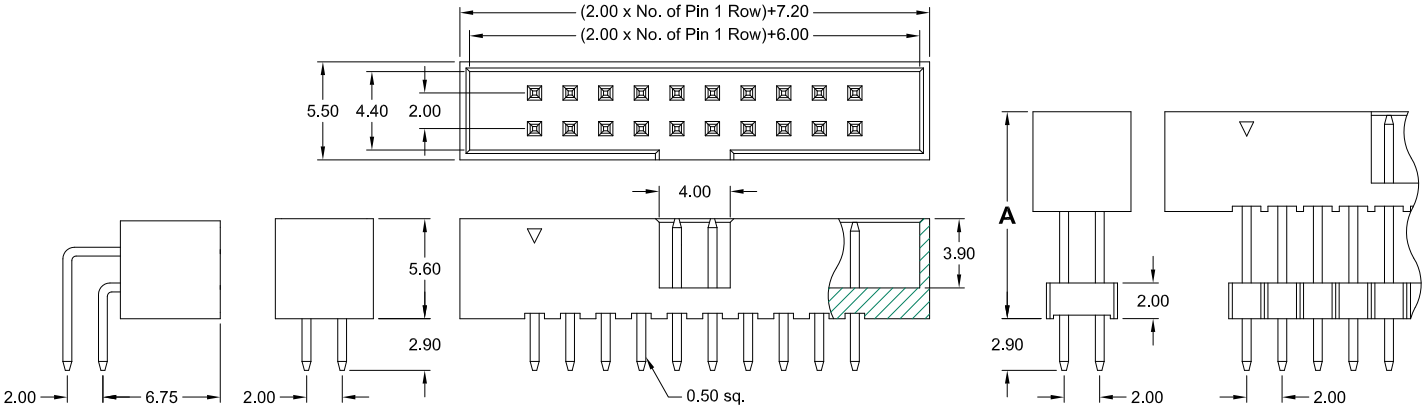

Style **R562** **S562** **D762/xx**

Application and Features

- Designed to mate with IDC female connector IDS-xxx-X200-95/P
- Reliable flat cable to PCB connection
- No ejection latches for space saving

PCB Hole Layout

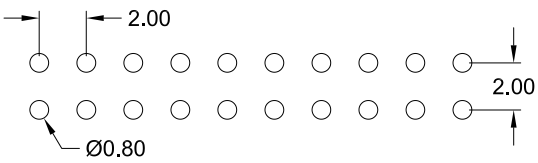

Specifications

Current rating	1 A	Operating temperature	- 40°C to +105°C
Insulation resistance	1000 MΩ min.	Contact material *(RoHS compliant)*	Copper alloy
Withstanding voltage	500 V AC	Insulator material *(RoHS compliant)*	PBT UL 94 V-0

How to order

SLS - xxx - Xxxx - 55/2

Nbr of pins

006 to **068**

except:
038; 042; 046; 048; 052
054; 056; 058; 062; 066

Style

S562 = straight
R562 = right angle

Raised Style:

D762/00 DIM "A" = 7.60 mm
D762/01 DIM "A" = 17.80 mm
D762/02 DIM "A" = 10.40 mm

other dimensions on request

Plating

55 = Gold

other platings on request

2.00mm pitch Box Header

- SMT -

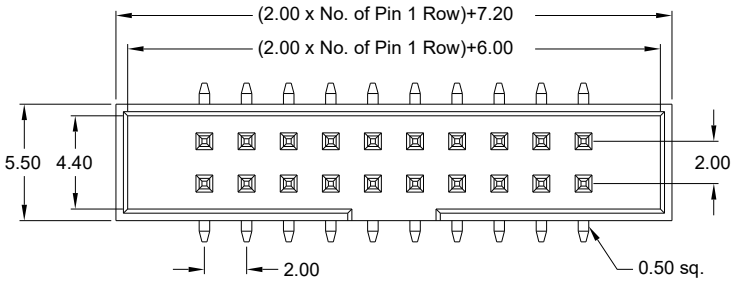

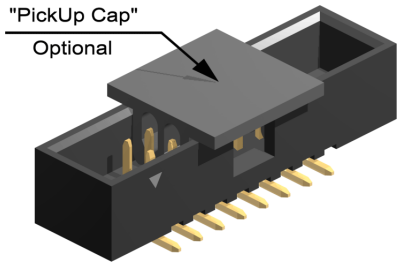

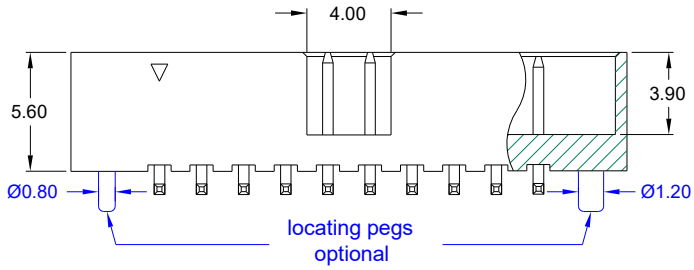

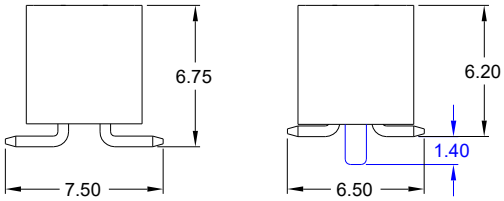

Application and Features

- ***Standard:***
  without locating pegs, Tray packing and without "PickUp Cap"
- Also available "Reel" packing
- Designed to mate with IDC female connector IDS-xxx-X 200-95/P
- Reliable flat cable to PCB connection
- No ejection latches for space saving

PCB Surface Mount Layout

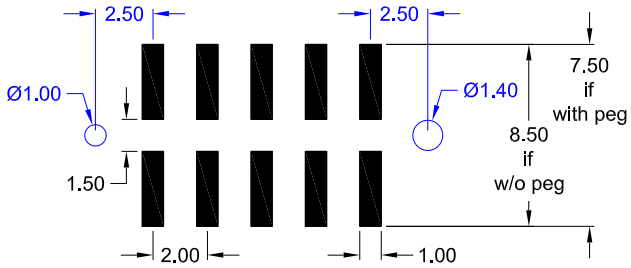

Specifications

Current rating	1 A
Insulation resistance	1000 MΩ min.
Withstanding voltage	500 V AC

Operating temperature	- 40°C to +105°C
Processing temperature	+250°C +0/-5°C for 5sec.
Contact material *(RoHS compliant)*	Copper Alloy
Insulator material *(RoHS compliant)*	PA6T UL 94 V-0

How to order

SLS - xxx - H562 - 55/2 X

Nbr of pins

without "locating pegs"
006 to **068**

except:
038; 042; 046; 048; 052
054; 056; 058; 062; 066

with "locating pegs"
008 to **050**

Plating

55 = Gold

other platings on request

Options

without "locating pegs"

F	=	Tray packing; with „PickUp Cap"
T	=	Tube packing; without „PickUp Cap"
A	=	Tube packing; with „PickUp Cap"
B	=	Reel packing; with „PickUp Cap"

with "locating pegs"

C	=	Tube packing; without „PickUp Cap"
D	=	Tube packing; with „PickUp Cap"
E	=	Reel packing; with „PickUp Cap"

2.00mm pitch Female Header
- THT - low profile

RoHS compliant

E-tec Interconnect

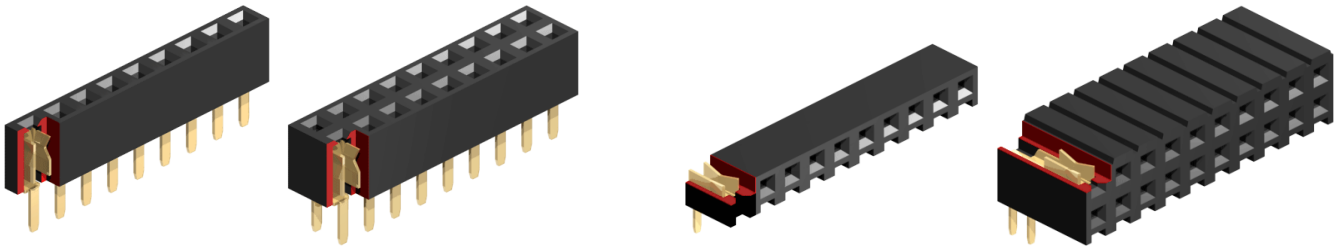

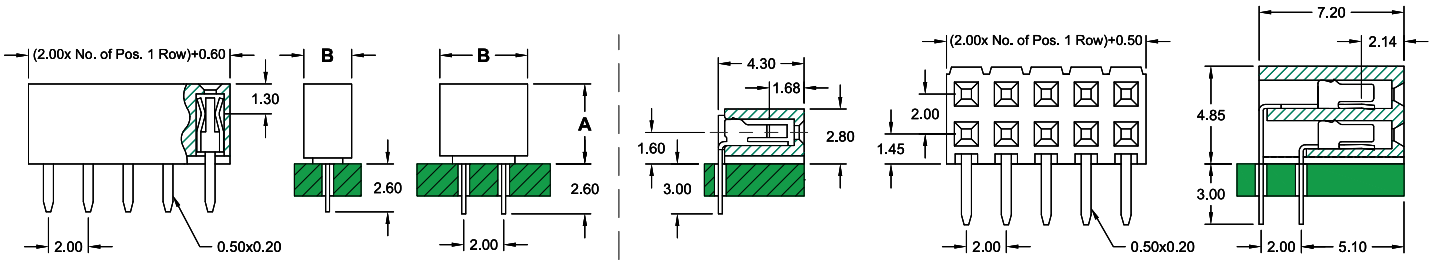

Style **S4xx** **R430** **R720**

Specifications

Current rating	2 A
Insulation resistance	1000 MΩ min.
Contact resistance	20 mΩ max.
Withstanding voltage	500 V AC
Operating temperature	- 40°C to +105°C
Contact material *(RoHS compliant)*	Phosphor Bronze
Insulator material *(RoHS compliant)*	PA6T UL 94 V-0

PCB Hole Layout

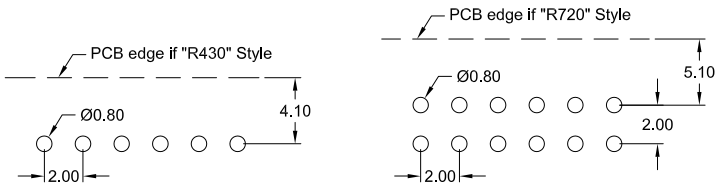

Application and Features

Low profile, 4.00mm and 4.30mm height single & dual row straight.

Designed for board to board small spacing interconnection.

High quality dual beam contacs mating with 0.50 x 0.50mm Pin Header.

How to order

BL x - xxx - Xxxx - 55/2

Rows	Nbr of contacts	Style	Plating
1 = single row	S400 & S430 = **002** to **040** R430 = **003** to **025**	**S400** = straight – single row : "A"=4.00 mm "B"=2.20 mm straight – dual row : "A"=4.00 mm "B"=4.20 mm **S430** = straight – single row : "A"=4.30 mm "B"=2.40 mm straight – dual row : "A"=4.30 mm "B"=4.60 mm **R430** = right angle – single row **R720** = right angle – dual row	**55** = Gold other platings on request
2 = dual row	S400 & S430 = **004** to **080** R720 = **004** to **080**		

2.00mm pitch Female Header
- THT - 6.35mm profile straight

RoHS compliant

E-tec Interconnect

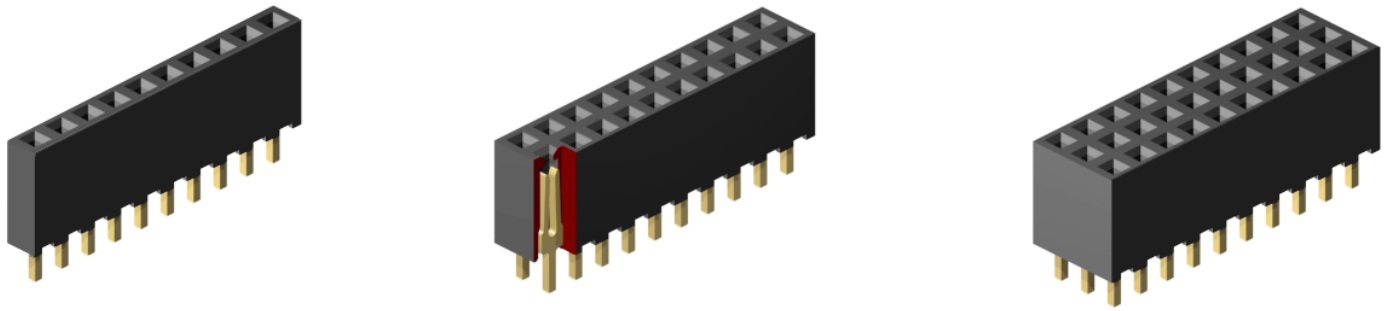

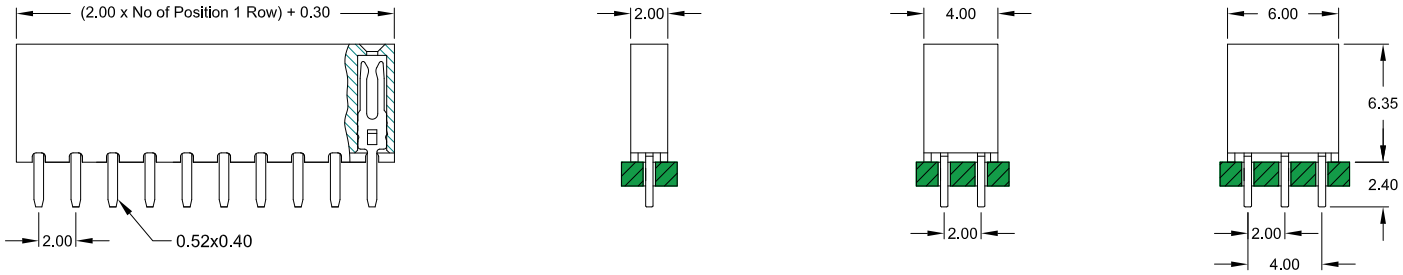

Application and Features

- For board-to-board connections
- Ideal solution for PC/104 Systems
- Accepts 0.50mm square pins
- Hi-rel fork contact design

PCB Hole Layout

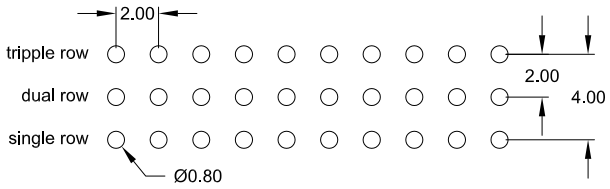

Specifications

Current rating	2 A	Operating temperature	- 40°C to +105°C
Insulation resistance	1000 MΩ min.	Contact material *(RoHS compliant)*	Copper Alloy
Contact resistance	20 mΩ max.	Insulator material *(RoHS compliant)*	LCP UL 94 V-0
Withstanding voltage	500 V AC		

How to order

BL x - xxx - SH635 - 55/2

Rows	Nbr of contacts	Plating
1 = single row	single row = **002** to **040**	**55** = Gold
2 = dual row	dual row = **004** to **080**	other platings on request
3 = triple row	triple row = **006** to **120**	

2.00mm pitch Female Header
- THT - 6.35mm profile right angle

RoHS compliant

E-tec Interconnect

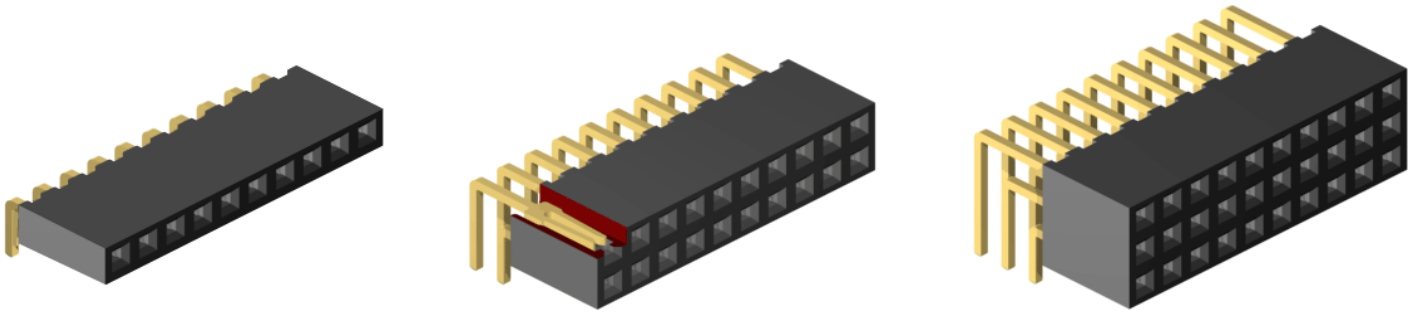

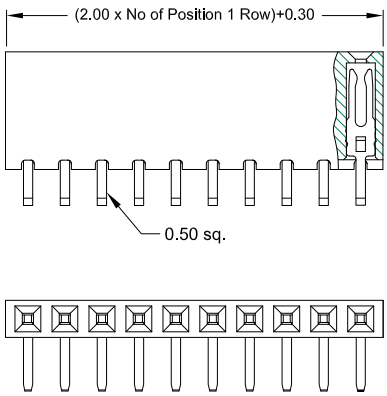

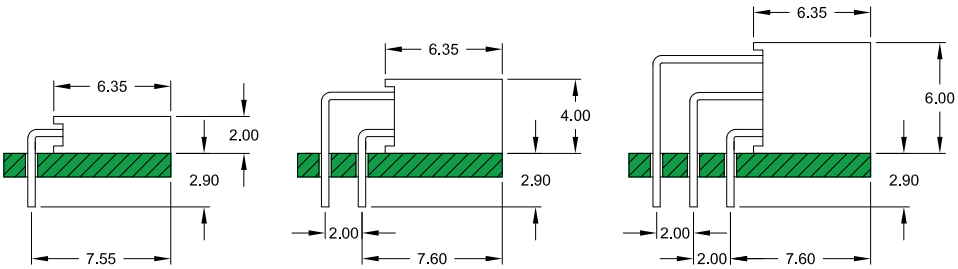

Application and Features

- For board-to-board connections
- Ideal solution for PC/104 Systems
- Accepts 0.50mm square pins
- Hi-rel fork contact design

PCB Hole Layout

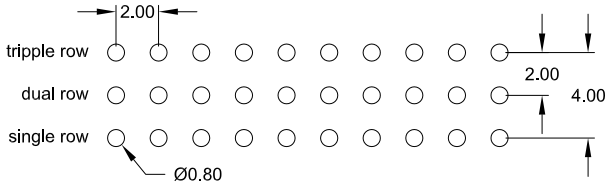

Specifications

Current rating	2 A
Insulation resistance	1000 MΩ min.
Contact resistance	20 mΩ max.
Withstanding voltage	500 V AC
Operating temperature	- 40°C to +105°C
Contact material *(RoHS compliant)*	Copper Alloy
Insulator material *(RoHS compliant)*	LCP UL 94 V-0

How to order

BL x - xxx - RH635 - 55/2

Rows	Nbr of contacts	Plating
1 = single row	single row = **002** to **040**	**55** = Gold
2 = dual row	dual row = **004** to **080**	other platings on request
3 = triple row	triple row = **006** to **120**	

2.00mm pitch Female Header
- THT - Elevated

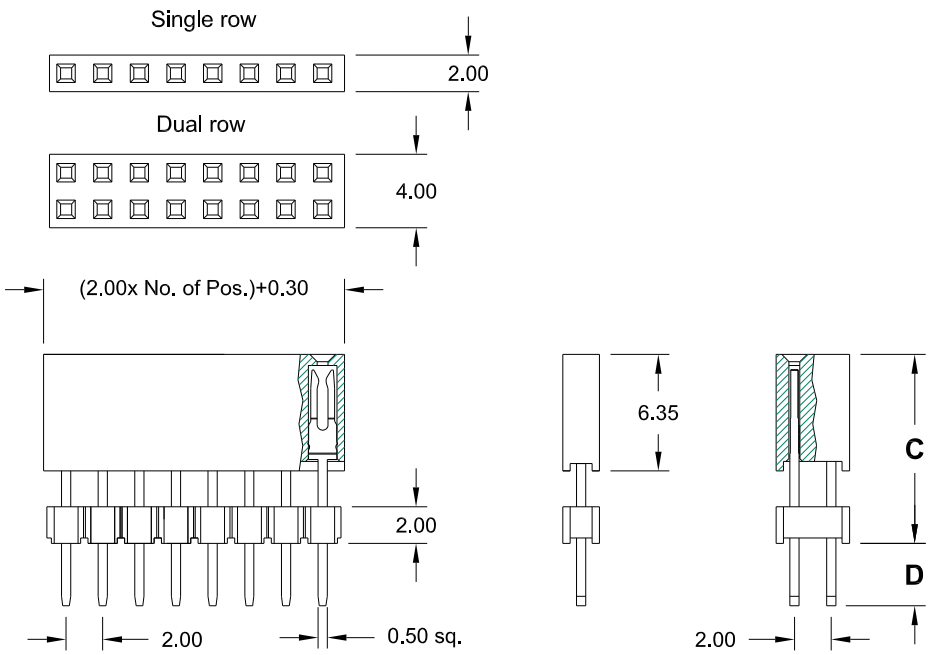

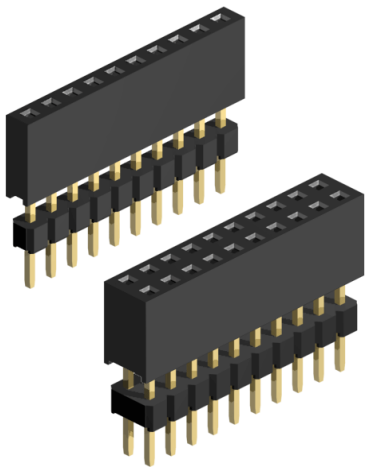

Note:
The number of spacer strips, and their possible distance from one another can vary, and depends on the "C" dimension.

Application and Features

- Various heights for board-to-board connections
- Also ideal solution for PC/104 Systems
- Accepts 0.50 mm square pins
- Hi-rel fork contact design

PCB Hole Layout

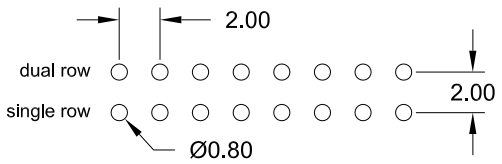

Specifications

Current rating	2 A
Insulation resistance	1000 MΩ min.
Contact resistance	20 mΩ max.
Withstanding voltage	500 V AC

Operating temperature		- 40°C to +105°C
Contact material	*(RoHS compliant)*	Copper Alloy
Insulator material	*(RoHS compliant)*	LCP UL 94 V-0

How to order

BE x - xxx - S xxx - 55/2

Rows		
1	=	single row
2	=	dual row

Nbr of contacts		
002	to	**040**
004	to	**080**

	Style	DIM "C"	DIM "D"
S	**831**	8.35 mm	3.40 mm
	832	10.30 mm	3.20 mm
	833	11.00 mm	2.30 mm
	834	16.08 mm	2.30 mm
S	**835**	9.40 mm	2.30 mm
S	**836**	18.20 mm	3.40 mm
S	**837**	19.30 mm	2.30 mm
	838	17.70 mm	2.80 mm
	839	19.00 mm	2.50 mm
S	**840**	16.40 mm	5.20 mm
S	**841**	11.00 mm	10.60 mm
	843	15.50 mm	3.50 mm
	844	8.35 mm	2.80 mm
S	**845**	13.50 mm	8.10 mm

other dimensions on request

"**S**" = available as **Standard** with "C" + "D" = 11.70mm & 21.60mm

Plating		
55	=	Gold

other platings on request

2.00mm pitch Female Header - THT - "PC 104+ Type"

Quad Row, 160 contacts max.

RoHS compliant

E-tec Interconnect

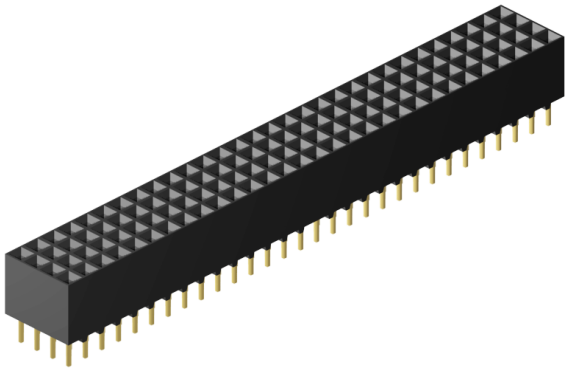

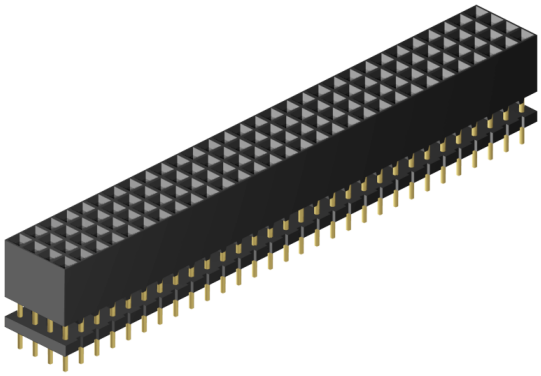

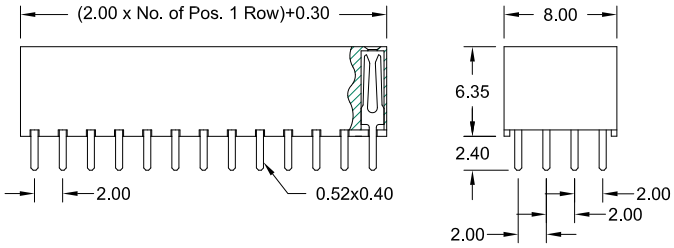

Style **630/0**

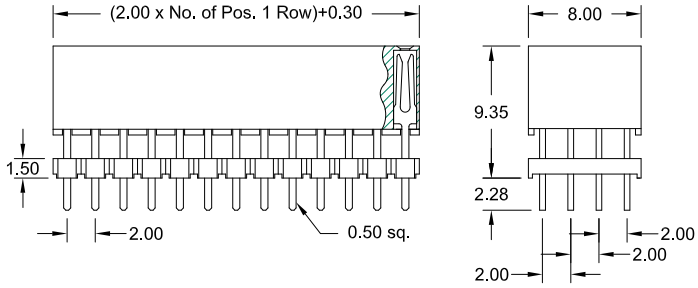

Style **630/1**

Specifications

Current rating	2 A
Insulation resistance	1000 MΩ min.
Contact resistance	20 mΩ max.
Withstanding voltage	500 V AC
Operating temperature	- 40°C to +105°C
Contact material *(RoHS compliant)*	Phosphor Bronze
Insulator material *(RoHS compliant)*	LCP UL 94 V-0

PCB Hole Layout

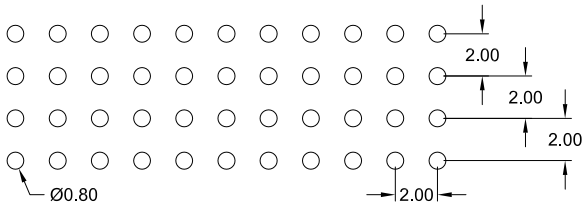

Application and Features

Low and high Profile PC/104-*Plus* Type

Designed for "board to board" small spacing interconnection

With standoff's for post solder cleaning

Mate with Pin Header SL4 – xxx – S830/x – xx/2

How to order

BL4 - xxx - S xxx/x - 55/2

Nbr of contacts
008 to **160**

Style	Dimension above PCB
630/0 *(standard)*	6.35 mm
630/1 *(raised)*	9.35 mm
other dimensions on request	

Plating
55 = Gold
other platings on request

2.00mm pitch Female Header

- THT - dual entry type low profile

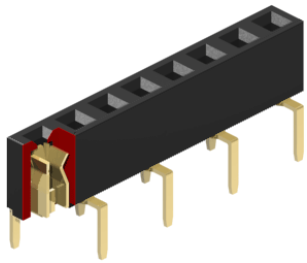

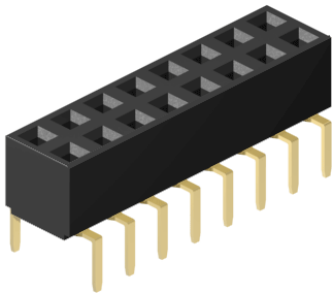

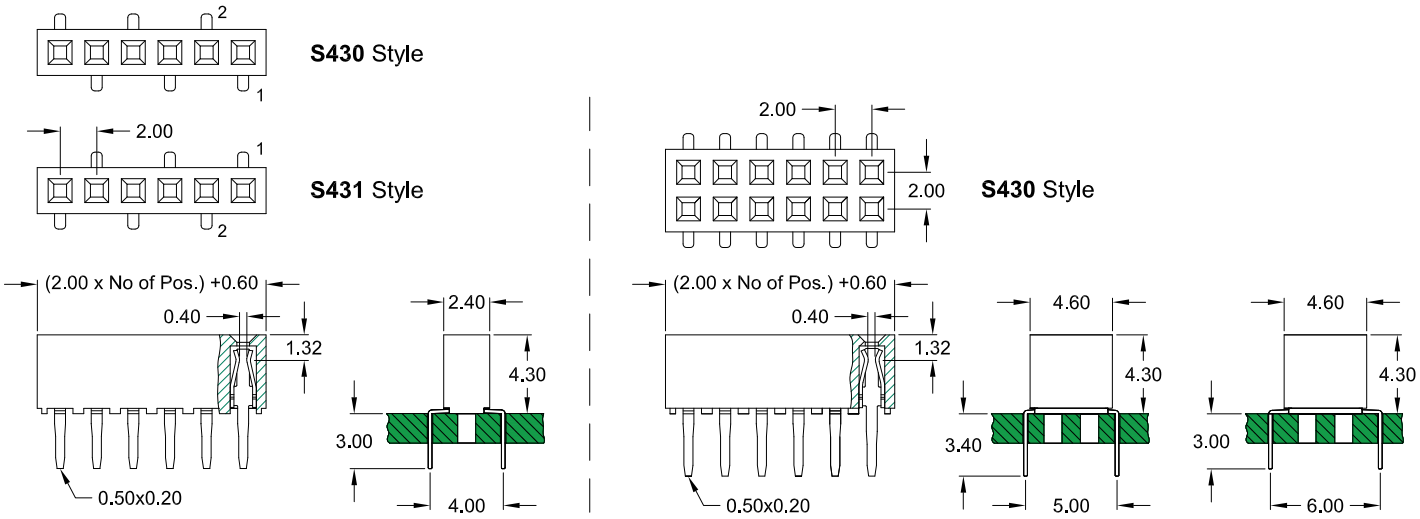

BB1-4xx- **BB2-5xx-** **BB2-6xx-**

PCB Hole Layout

1 row - zig-zag pin-out

Style **S430** Style **S431**

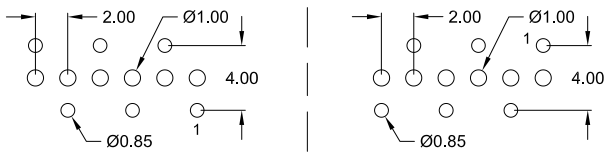

2 rows - pin spacing pin-out

5.00mm **6.00mm**

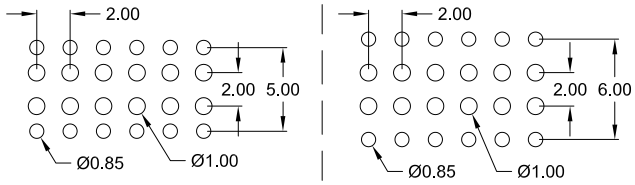

Application and Features

- Hi-rel dual beam contact assures reliable PCB connections
- Dual entry design for board stacking
- Accepts 0.50mm square pins

Specifications

Current rating	2 A
Insulation resistance	1000 MΩ min.
Contact resistance	20 mΩ max.
Withstanding voltage	500 V AC
Operating temperature	- 40°C to +105°C
Contact material *(RoHS compliant)*	Phosphor Bronze
Insulator material *(RoHS compliant)*	PA6T UL 94 V-0

How to order

BB x - x xx - S xxx - 55/2

Rows	Pin spacing	Nbr of contacts	Foot Style	Plating
1 = single row	**4** = 4.00mm zig-zag	*single row* **02** to **40**	*single row* **430** & **431** pls. choose **430** Style if odd pin count.	**55** = Gold
2 = dual row	**5** = 5.00 mm **6** = 6.00 mm	*dual row* **04** to **80**	*dual row* **430**	other plating on request

2.00mm pitch Female Header
- THT - side entry type

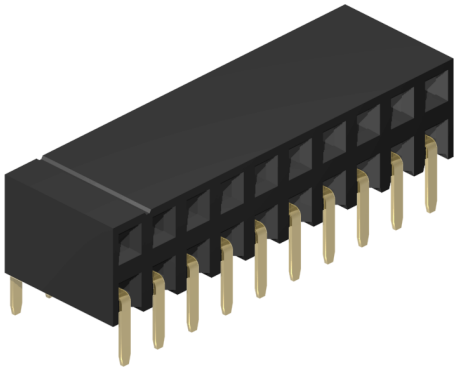

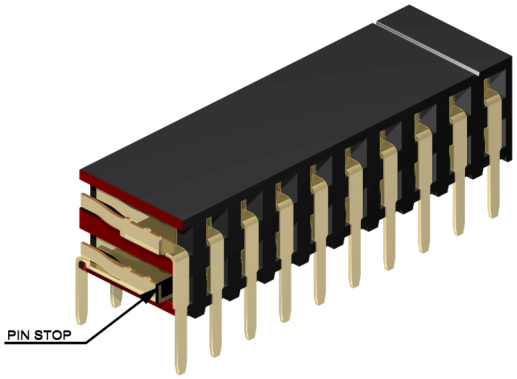

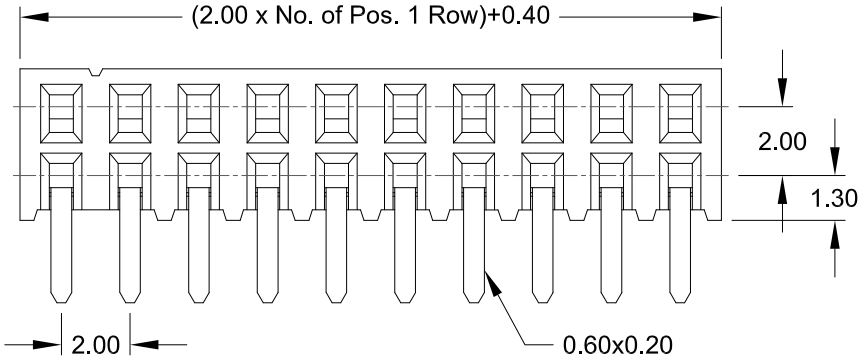

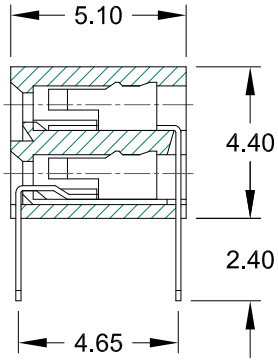

Application and Features

- ***Standard: Tube packing***
- Hi-rel dual beam contact with "Pin Stop" assures reliable connections
- Accepts 0.50 mm square pins; Pin Header 2.00 mm x 2.00 mm
- 4.40 mm height above board
- Stand-off's facilitate post solder cleaning

PCB Hole Layout

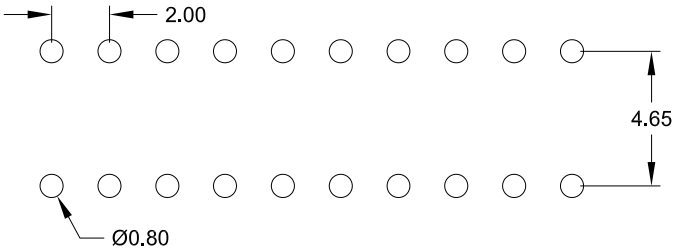

Specifications

Current rating	2 A
Insulation resistance	1000 MΩ min.
Contact resistance	20 mΩ max.
Withstanding voltage	500 V AC

Operating temperature	- 40°C to +105°C
Contact material *(RoHS compliant)*	Phosphor Bronze
Insulator material *(RoHS compliant)*	PA6T UL 94 V-0

How to order

BH2 - xxx - R450 - 55/2

Nbr of contacts
004 to **050**

Plating
55 = gold
other platings on request

2.00mm pitch Female Header

- SMT - 4.30mm profile

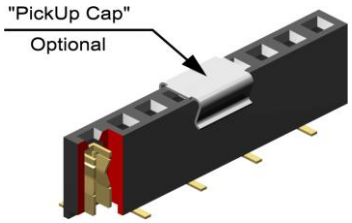

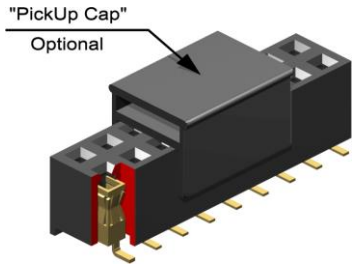

Foot Style

430 **431**

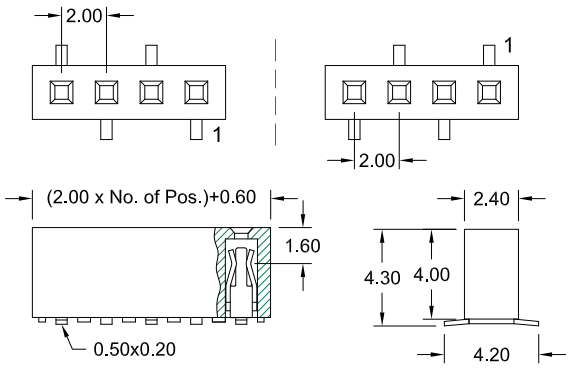

Style **430**

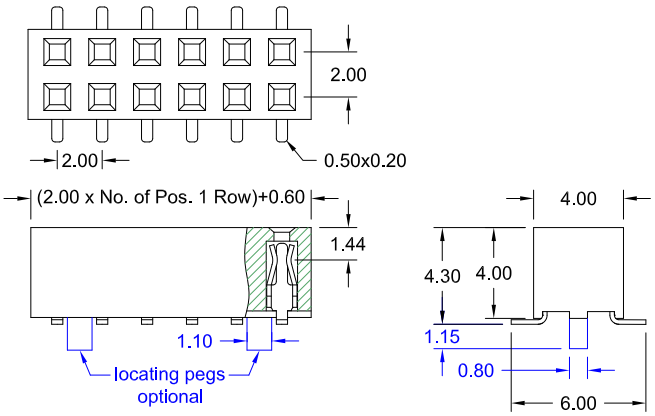

Application and Features

- ***Standard: Tube packing and without "PickUp Cap"***
- Low profile, 4.30 mm height.
- Hi-rel dual beam contacts
- Mating with 2.00 mm pitch, 0.50 mm square, or round Pin Headers

PCB Surface Mount Layout

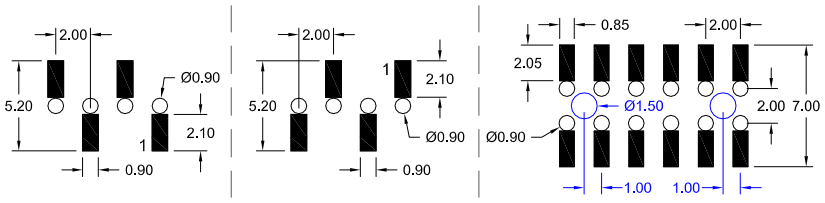

Foot Style: **430** **431** **430**

Specifications

Current rating	2 A	Operating temperature	- 40°C to +105°C
Insulation resistance	1000 MΩ min.	Processing temperature	+250°C +0/-5°C for 5sec.
Contact resistance	20 mΩ max.	Contact material *(RoHS compliant)*	Phosphor Bronze
Withstanding voltage	500 V AC	Insulator material *(RoHS compliant)*	PA6T UL 94 V-0

How to order

BS x - xxx - H xxx - 55/2 X

Rows	Nbr of contacts	Foot Style	Plating	Options
1 single row	**003** to **040**	**430** (standard) **431** (option) Pls. choose **430** Style if odd pin count	**55** = Gold other platings on request	**A** = Tube packing; with „PickUp Cap" **B** = Reel packing; with „PickUp Cap"
2 dual row	**006** to **080**	**430**		**without "locating pegs"** **A** = Tube packing; with „PickUp Cap" **B** = Reel packing; with „PickUp Cap" **with "locating pegs"** **C** = Tube packing; without „PickUp Cap" **D** = Tube packing; with „PickUp Cap" **E** = Reel packing; with „PickUp Cap"

2.00mm pitch Female Header

- SMT - Top & Bottom Entry 2.20mm profile

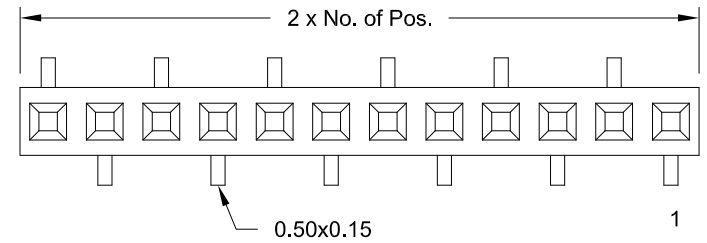

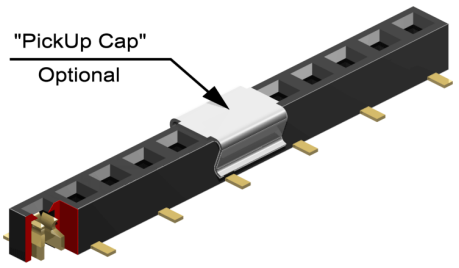

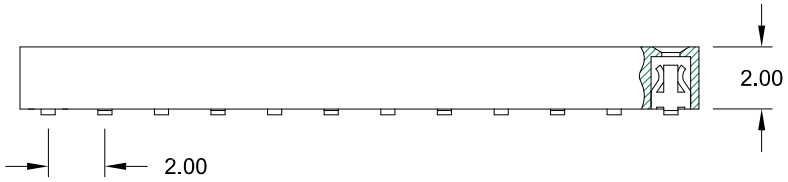

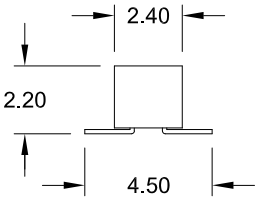

PCB Surface Mount & Hole Layout

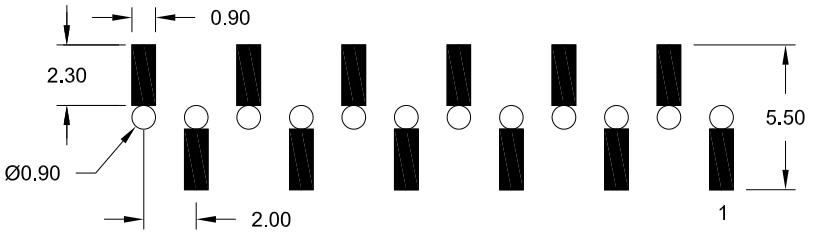

Application and Features

- **Standard: Tube packing and without "PickUp Cap"**
- Low profile, 2.20mm height above PCB available
- Mating with 2.00mm pitch, 0.50mm square, or round Pin Headers
- Designed for board to board small spacing interconnection

Specifications

Current rating	2 A
Insulation resistance	1000 MΩ min.
Contact resistance	20 mΩ max.
Withstanding voltage	500 V AC
Operating temperature	- 40°C to +105°C
Processing temperature	+250°C +0/-5°C for 5sec.
Contact material *(RoHS compliant)*	Phosphor Bronze
Insulator material *(RoHS compliant)*	PA6T UL 94 V-0

How to order

BS1 - xxx - TB 22 - 55/2 X

Nbr of contacts	Plating	Packing and „PickUp Cap" Option
002 to **040**	**55** = Gold	**A** = Tube packing; with „PickUp Cap" **B** = Reel packing; with „PickUp Cap"

When using this female connector as a bottom entry connector, we recommend that the Pin Header pins protrude by around 2.00mm above the surface of the female connector after assembly.
This will avoid any risk of separation of the Pin Header from the Female Header during shock and vibration.

2.00mm pitch Female Header - SMT – Top & Bottom Entry 2.20mm & 2.95mm profile

RoHS compliant

E-tec Interconnect

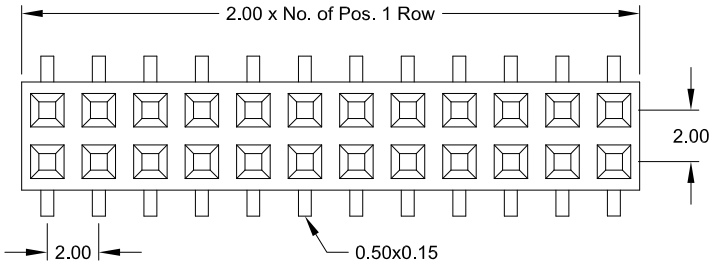

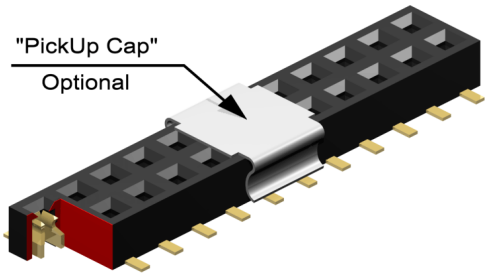

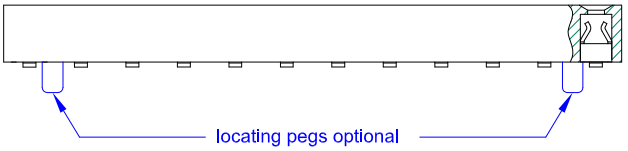

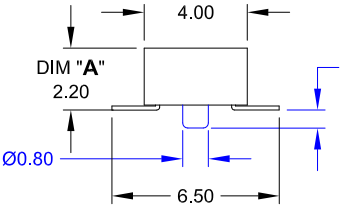

TB22

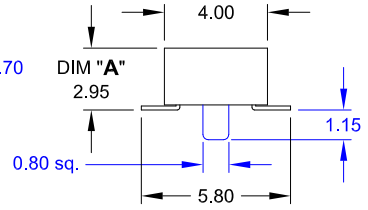

TB28

PCB Surface Mount & Hole Layout

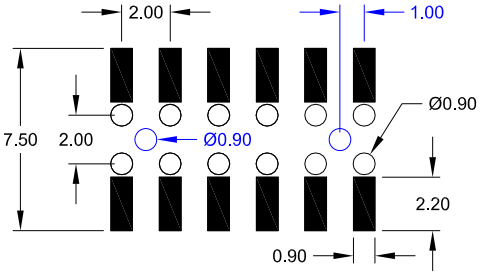

TB22

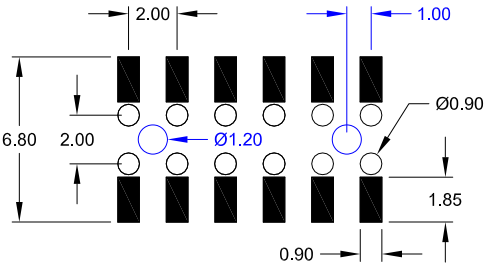

TB28

Application and Features

- **Standard: Tube packing, without "locating pegs" and without "PickUp Cap"**
- Low profile, 2.20mm and 2.95mm height above PCB available
- Mating with 2.00mm x 2.00mm pitch, 0.50mm square, or round Pin Headers
- Designed for board to board small spacing interconnection

Specifications

Current rating	2 A
Insulation resistance	1000 MΩ min.
Contact resistance	20 mΩ max.
Withstanding voltage	500 V AC
Operating temperature	- 40°C to +105°C
Processing temperature	+250°C +0/-5°C for 5sec.
Contact material *(RoHS compliant)*	Phosphor Bronze
Insulator material *(RoHS compliant)*	PA6T UL 94 V-0

How to order

BS2 - xxx - TB xx - 55/2 X

Nbr of contacts		
006	to	**080**
006	to	**070**

Height Option	
22	DIM „**A**" = 2.20 mm
28	DIM „**A**" = 2.95 mm

Plating
55 = Gold

When using this female connector as a bottom entry connector, we recommend that the Pin Header pins protrude by around 2.00mm above the surface of the female connector after assembly. This will avoid any risk of separation of the Pin Header from the Female Header during shock and vibration.

Options

without "locating pegs"

- **A** = Tube packing; with „PickUp Cap"
- **B** = Reel packing; with „PickUp Cap"

with "locating pegs"

- **C** = Tube packing; without „PickUp Cap"
- **D** = Tube packing; with „PickUp Cap"
- **E** = Reel packing; with „PickUp Cap"

2.00mm pitch Female Header
- SMT- side entry

RoHS compliant

E-tec Interconnect

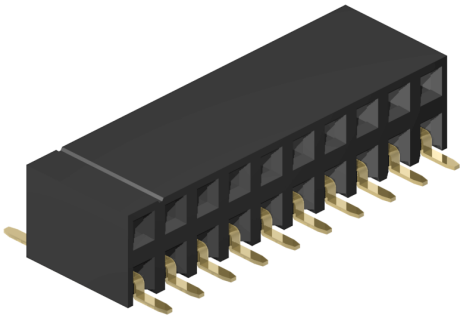

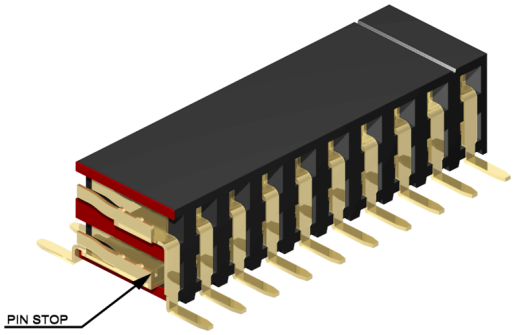

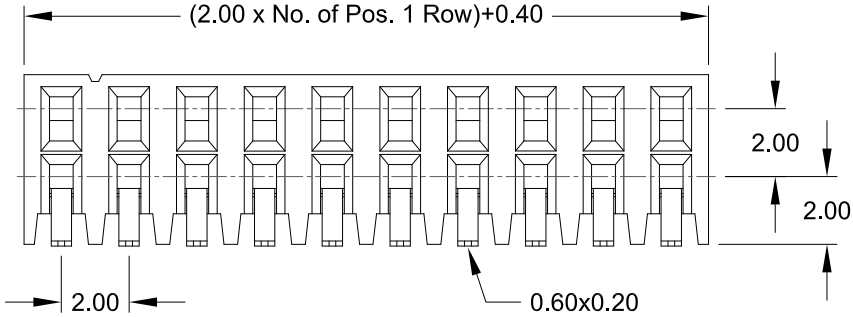

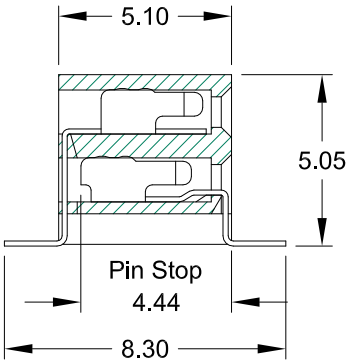

Application and Features

- ***Standard: Tube packing***
- Hi-rel dual beam contact with "Pin Stop" assures reliable connections
- Accepts 0.50 mm square pins; Pin Header 2.00 mm x 2.00 mm
- 5.00 mm height above board
- Stand-off's facilitate post solder cleaning

PCB Surface Mount Layout

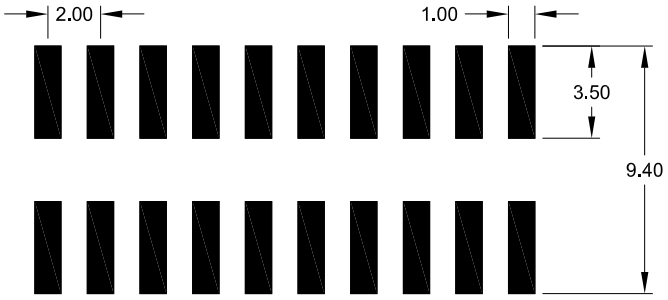

Specifications

Current rating	1 A
Insulation resistance	1000 MΩ min.
Contact resistance	20 mΩ max.
Withstanding voltage	500 V AC

Operating temperature	- 40°C to +105°C
Processing temperature	+250°C +0/-5°C for 5sec.
Contact material *(RoHS compliant)*	Phosphor Bronze
Insulator material *(RoHS compliant)*	PA6T UL 94 V-0

How to order

BS2 - xxx - R500 - 55/2 X

Nbr of contacts	Plating	Packing Option
004 to **050**	**55** = Gold other platings on request	**R** = Reel no suffix for tube packing

2.00mm pitch

IDC – Female Connector

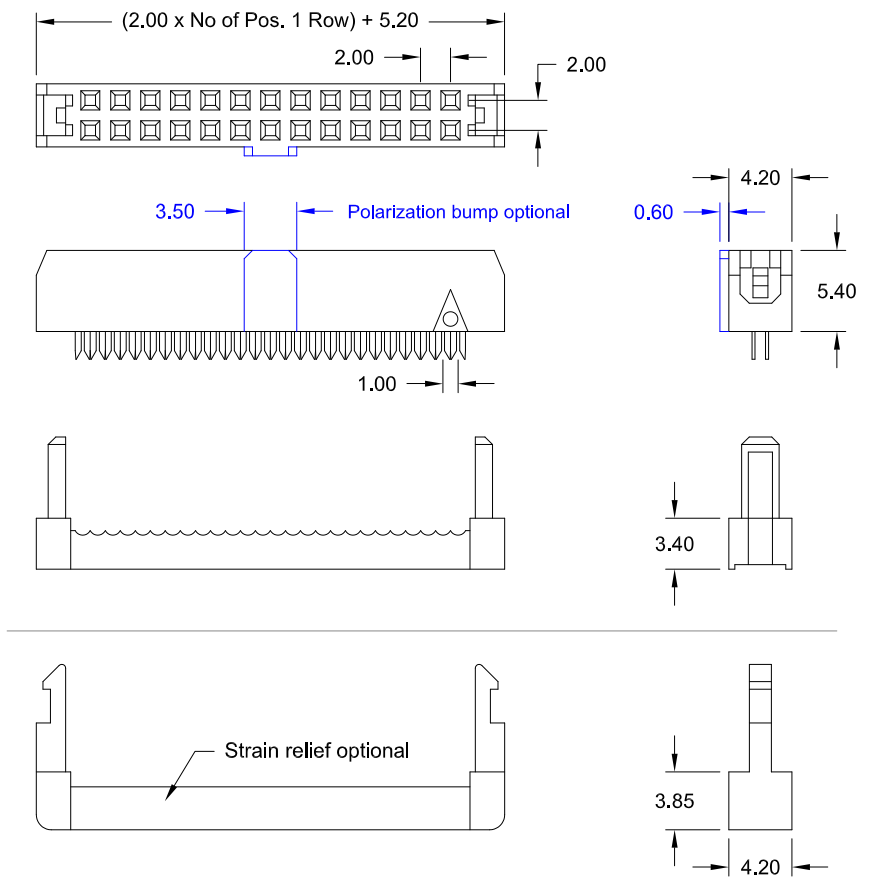

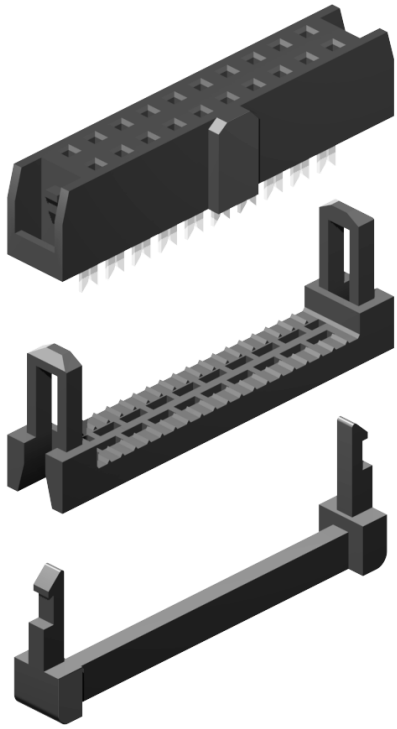

Specifications

Current rating	1 A		Operating temperature	- 40°C to +105°C
Insulation resistance	1000 MΩ min.		Contact material *(RoHS compliant)*	Copper alloy
Contact resistance	15 mΩ max.		Insulator material *(RoHS compliant)*	PBT (black) UL 94 V-0
Withstanding voltage	500 V AC			

Application and Features

Designed to mate with 0.50mm square pins Box Header

High Quality dual beam contacts

Accepts 26 & 28 AWG 1.00mm flat ribbon cable.

How to order

IDS - xxx - X 200 - N5 (/P)

Nbr of contacts	Strain relief	Plating	Option
006; **008**; **010**; **012**; **014**; **016** **020**; **022**; **024**; **026**; **028 030** **032**; **034**; **036**; **040 044**; **050** **060**; **064**; **068**	**S** = with **W** = without	**N5** = Nickel / Gold other platings on request	**/P** Polarization bump

2.54mm pitch Pin Header

- THT - straight

RoHS compliant

E-tec Interconnect

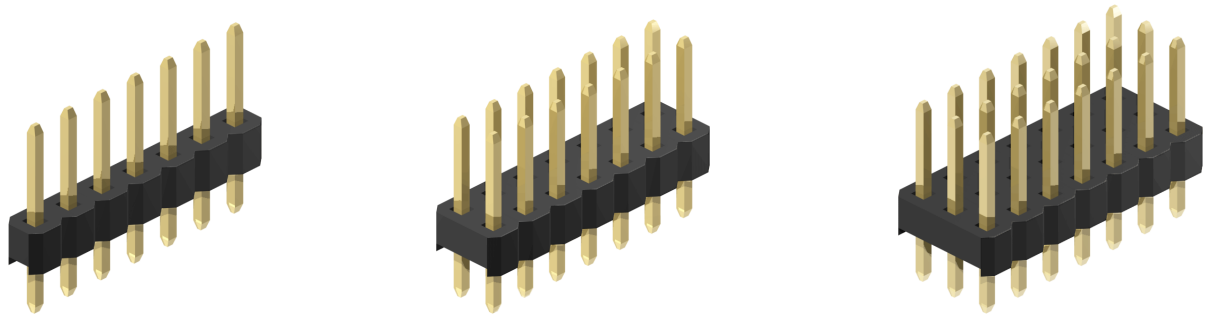

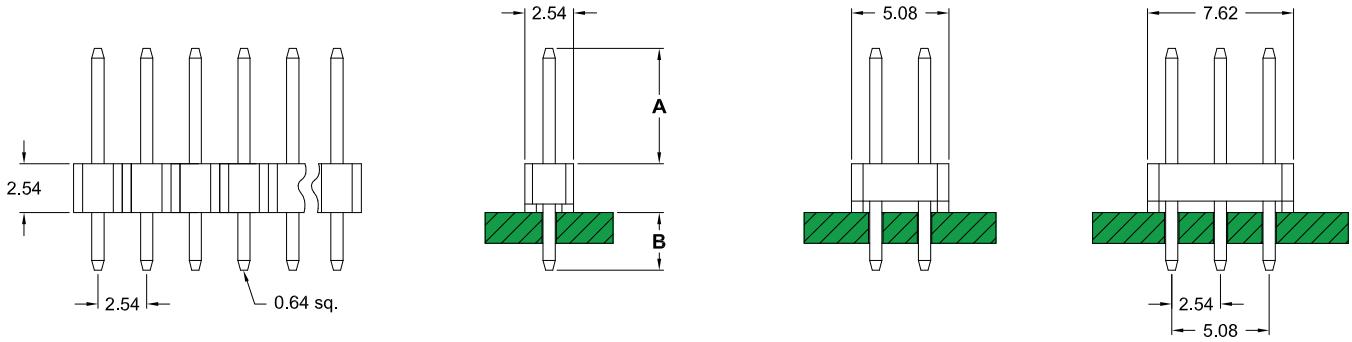

Pin code	DIM "A"	DIM "B"	Pin code	DIM "A"	DIM "B"	Pin code	DIM "A"	DIM "B"	Pin code	DIM "A"	DIM "B"	Pin code	DIM "A"	DIM "B"	Pin code	DIM "A"	DIM "B"
085/02	3,00	3,00	**109/03**	5,40	3,00	**110/03**	6,00	2,50	**110/02**	7,00	1,50	**140/12**	8,20	3,30	**167/02**	11,20	3,00
114/02	3,10	5,80	**117/01**	5,40	3,80	**113/05**	6,00	2,80	**125/01**	7,00	3,00	**138/02**	8,30	3,00	**185/05**	11,20	4,80
186/03	3,20	12,90	**108/11**	5,50	2,80	**116/01**	**6.00**	**3.10**	**135/03**	7,00	4,00	**135/02**	8,50	2,50	**184/08**	11,60	4,30
257/01	3,20	20,00	**116/02**	5,50	3,30	**125/20**	6,00	4,00	**167/01**	7,10	7,10	**140/03**	8,50	3,00	**172/01**	11,70	3,00
090/02	3,50	3,00	**120/04**	5,50	4,00	**140/06**	6,00	5,40	**125/13**	7,20	2,80	**195/03**	8,50	8,50	**176/02**	11,80	3,30
140/08	3,50	7,90	**108/02**	5,70	2,54	**109/04**	6,10	2,30	**128/03**	7,30	3,00	**140/14**	8,70	2,80	**177/01**	12,00	3,20
105/03	3,70	4,30	**125/03**	5,70	4,30	**116/10**	6,10	3,00	**115/02**	7,50	1,50	**142/01**	9,30	2,40	**195/05**	12,00	5,00
108/14	3,70	4,00	**135/01**	5,70	5,30	**147/06**	6,10	6,10	**126/03**	7,50	2,60	**145/03**	9,40	2,60	**178/01**	12,30	3,00
093/01	3,80	3,00	**139/01**	5,70	5,70	**108/03**	6,30	2,00	**136/07**	7,50	3,60	**147/12**	9,50	2,70	**271/01**	12,30	12,30
085/08	4,00	2,00	**184/12**	5,70	10,20	**113/06**	6,50	2,30	**140/16**	7,50	4,00	**154/03**	9,60	3,30	**177/02**	12,40	2,80
095/02	4,00	3,00	**209/03**	5,70	12,70	**118/05**	6,50	2,80	**175/02**	7,50	7,50	**155/08**	10,00	3,00	**186/01**	12,40	3,80
095/01	4,20	2,80	**216/01**	5,70	13,40	**120/05**	6,50	3,00	**134/01**	7,70	3,20	**175/06**	10,00	5,00	**218/02**	12,50	6,80
105/05	4,20	3,60	**240/01**	5,70	15,75	**122/05**	6,50	3,20	**184/11**	7,90	7,90	**190/05**	10,00	6,50	**184/02**	12,60	3,00
108/10	4,30	4,00	**267/01**	5,70	18,50	**109/05**	6,60	1,80	**125/08**	8,00	1,80	**209/04**	10,20	8,20	**185/01**	12,70	3,30
100/07	4,50	3,00	**106/02**	5,80	2,30	**123/01**	6,60	3,20	**135/08**	8,00	3,00	**160/10**	10,50	3,00	**184/06**	12,80	3,10
108/07	4,50	3,80	**113/02**	5,80	3,00	**125/10**	6,60	3,40	**140/13**	8,00	3,50	**163/02**	10,70	3,10	**216/07**	12,80	6,30
118/04	4,50	4,80	**114/03**	5,80	3,10	**125/04**	6,70	3,30	**137/01**	8,10	3,10	**155/06**	10,80	2,20	**184/01**	12,90	3,00
100/04	5,00	2,50	**116/07**	5,80	3,30	**159/03**	6,70	6,70	**164/04**	8,10	5,80	**165/01**	10,80	3,20	**345/01**	12,90	19,00
105/01	5,00	3,00	**185/03**	5,80	10,20	**126/01**	6,80	3,30	**191/03**	8,10	8,50	**164/02**	10,90	3,00	**180/12**	13,00	2,50
102/02	5,20	2,50	**312/04**	5,80	22,90	**138/03**	6,80	4,50	**138/01**	8,16	3,10	**165/03**	11,00	3,00	**185/04**	13,00	3,00
187/04	5,20	11,00	**105/04**	6,00	2,00	**125/15**	6,90	3,10	**135/10**	8,20	2,80	**178/03**	11,00	4,30	**215/03**	13,00	6,00

all dimension mm | **Standard dimension & pin code** | Many other dimensions available on request

Specifications

Current rating	3 A	Operating temperature	- 40°C to +105°C
Insulation resistance	1000 MΩ min.	Contact material *(RoHS compliant)*	Brass
Withstanding voltage	500 V AC	Insulator material *(RoHS compliant)*	PBT or PA6T UL 94 V-0 *Standard :* PBT

How to order

SL x - xxx - X xxx/xx - 55

Rows	Nbr of pins	Insulator	Pin code	Plating
1 = single row **2** = dual row **3** = triple row	single row = **002** to **040** dual row = **004** to **080** triple row = **009** to **120**	**S** = PBT **SH** = PA6T	see above table	**55** = Gold *(standard)* **99** = Tin *(leadfree)* **95** = Tin/Gold *(tin leadfree)* other platings on request

2.54mm pitch Pin Header

- THT - right angle

RoHS compliant

E-tec Interconnect

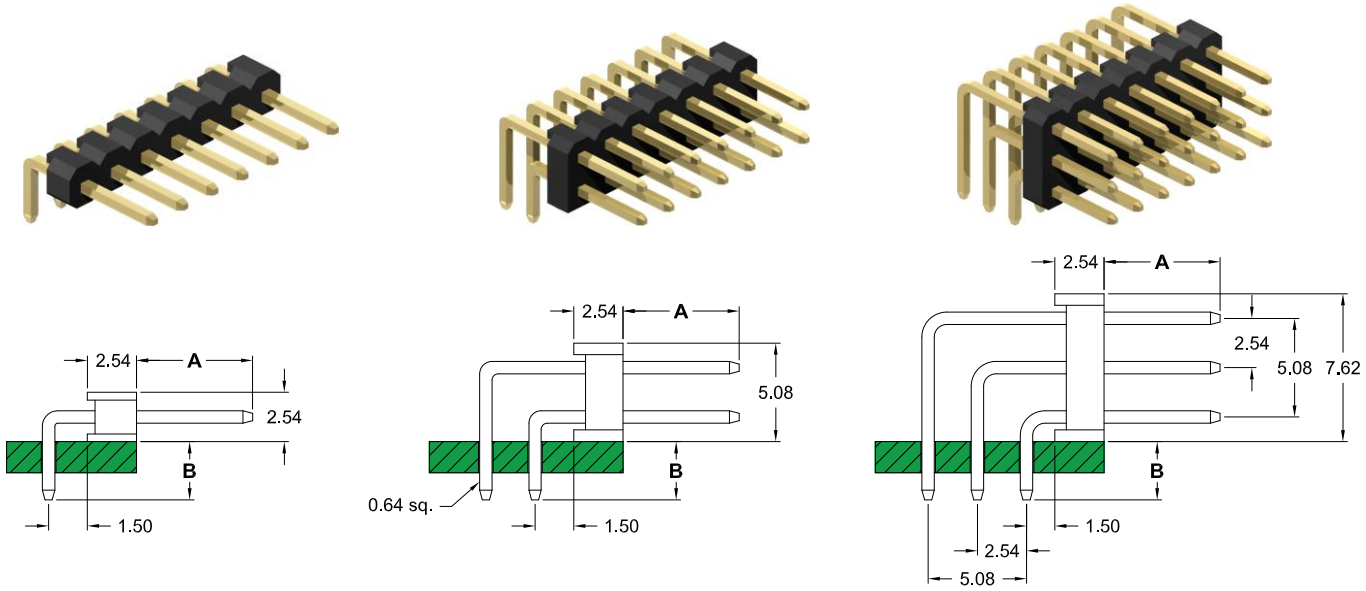

Down angle Pin Style

Pin code	DIM "A"	DIM "B"	Pin code	DIM "A"	DIM "B"	Pin code	DIM "A"	DIM "B"	Pin code	DIM "A"	DIM "B"	Pin code	DIM "A"	DIM "B"	Pin code	DIM "A"	DIM "B"
078/03	1,40	1,40	**120/06**	4,00	3,00	**141/01**	5,80	4,80	**140/03**	7,00	2,00	**159/04**	8,20	3,00	**251/01**	10,00	10,00
093/04	2,50	1,40	**120/01**	4,50	2,50	**211/07**	5,80	9,90	**145/04**	7,00	2,40	**203/06**	8,23	7,00	**184/09**	10,40	3,30
100/03	2,50	2,50	**125/07**	4,50	3,30	**258/02**	5,80	15,00	**147/01**	7,00	3,00	**246/01**	8,30	11,70	**186/01**	10,70	3,30
103/01	2,75	2,75	**125/06**	4,70	3,15	**159/01**	5,90	5,11	**176/01**	7,00	6,00	**159/02**	8,50	2,54	**203/05**	12,00	3,30
105/02	2,80	3,00	**147/04**	4,80	5,11	**201/01**	5,90	9,40	**147/03**	7,40	2,54	**165/02**	8,60	3,30	**230/07**	12,00	6,00
106/01	2,80	2,80	**125/09**	5,30	2,54	**125/16**	6,00	2,00	**133/03**	7,50	1,50	**169/01**	8,60	3,30	**203/03**	12,50	3,00
116/03	3,00	3,00	**133/02**	5,30	3,30	**135/12**	6,00	2,50	**136/06**	7,50	2,54	**158/02**	8,80	2,00	**203/02**	13,00	2,54
108/01	3,00	4,00	**125/11**	5,60	2,10	**140/01**	**6.00**	**3.00**	**140/04**	7,80	1,50	**170/02**	8,80	3,30	**209/01**	13,10	3,00
113/07	3,00	7,00	**132/01**	5,70	2,50	**171/02**	6,00	3,60	**155/05**	7,80	3,00	**165/01**	9,00	2,54	**216/03**	13,60	3,30
151/02	3,20	3,00	**133/01**	5,70	2,85	**312/06**	6,00	10,00	**162/03**	8,00	3,20	**184/05**	9,40	4,60	**230/05**	15,00	3,00
122/04	3,20	3,90	**137/03**	5,70	3,00	**140/09**	6,20	3,15	**136/01**	8,00	3,60	**176/03**	9,70	3,15			
106/02	3,30	2,30	**155/02**	5,70	5,11	**138/01**	6,50	2,60	**184/04**	8,00	5,80	**203/04**	9,70	5,80			
117/02	3,40	3,20	**260/06**	5,70	15,30	**149/01**	6,70	3,20	**187/02**	8,00	6,00	**166/01**	9,90	1,60			
111/01	3,50	2,75	**126/02**	5,80	2,30	**148/01**	6,75	2,90	**160/11**	8,10	2,80	**181/01**	9,90	3,20			
111/02	3,50	3,50	**134/02**	5,80	2,50	**213/01**	6,80	9,50	**182/01**	8,10	5,10	**250/02**	9,90	10,00			
116/04	3,60	2,54	**140/05**	5,80	3,60	**150/07**	6,90	3,00	**157/02**	8,13	2,54	**180/05**	9,96	3,30			
108/02	3,70	3,00	**140/11**	5,80	3,00	**147/02**	6,90	3,30	**155/04**	8,20	2,54	**170/03**	10,00	2,00			

all dimension mm | **Standard dimension & pin code** | Many other dimensions available on request

Up angle Pin Style

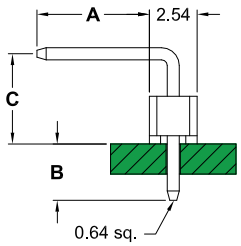

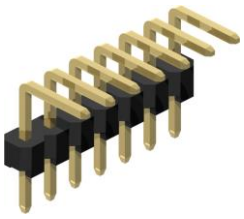

Pin code	DIM "A"	DIM "B"	DIM "C"	Pin code	DIM "A"	DIM "B"	DIM "C"	Pin code	DIM "A"	DIM "B"	DIM "C"
151/01	3,30	7.00	7,00	**170/04**	5,50	3,40	7,10	130/01	7,00	2,54	3,00
170/01	3,30	8.60	8,60	**135/11**	6,00	3,00	3,50	150/05	7,00	3,00	4,00
190/02	3,30	10.60	10,60	**147/07**	6,00	3,00	4,80	184/15	7,00	3,00	6,35
115/01	3,50	2.60	3,00	**160/05**	6,00	3,00	6,04	181/02	7,90	3,20	6,00
114/01	4,00	3.00	2,60	**175/03**	6,00	3,00	7,54	184/06	8,00	3,60	6,30
120/05	4,00	3.10	3,00	**155/03**	6,20	2,54	6,30	172/02	9,45	2,40	4,30
190/01	4,25	3.00	3,00	**160/03**	6,20	2,35	3,70	150/06	8,20	3,00	2,86
155/09	5,10	3.00	3,10	**140/13**	6,40	3,40	3,15	149/02	9,70	1,50	2,80

Specifications: Refer to straight Pin Headers | Many other dimensions available on request

How to order

SL x - xxx - X xxx/xx - 55

Rows	Nbr of pins	Pin style & Insulator	Pin code	Plating
1 = single row **2** = dual row **3** = triple row	single row = **002** to **040** dual row = **004** to **080** triple row = **009** to **120**	**R** = Down angle (PBT Insulator) **RH** = Down angle (PA6T Insulator) **U** = Up angle (PBT Insulator) **UH** = Up angle (PA6T Insulator)	see above table	**55** = Gold *(standard)* **99** = Tin *(leadfree)* **95** = Tin/Gold *(tin leadfree)* other platings on request

2.54mm pitch Pin Header
- THT - high plastic base

RoHS compliant

E-tec Interconnect

straight Style - 7.40mm body

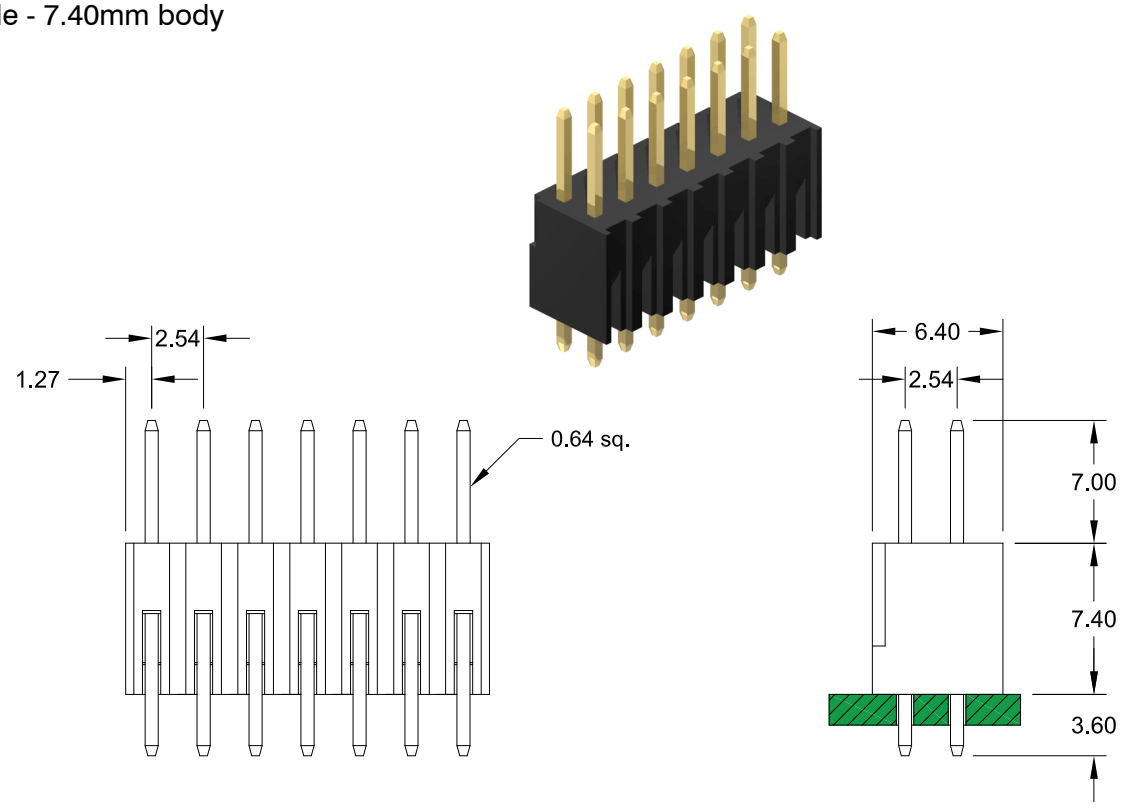

S740

right angle Style - 6.35mm body

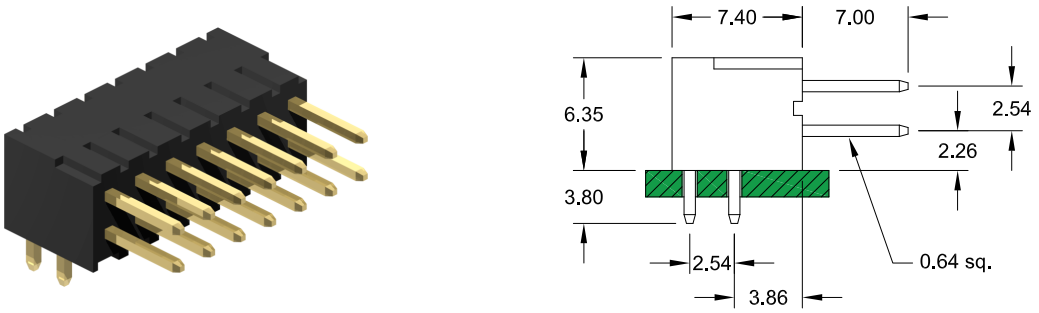

R635

Specifications

Current rating		3 A
Insulation resistance		1000 MΩ min.
Withstanding voltage		500 V AC
Operating temperature		- 40°C to +105°C
Contact material	*(RoHS compliant)*	Brass
Insulator material	*(RoHS compliant)*	PBT UL 94 V-0

PCB Hole Layout

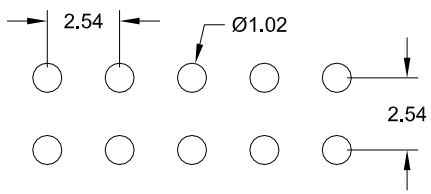

How to order

SE2 - xxx - Xxxx - 55

Nbr of pins
004 to **080**

Pin Style		
S740	=	straight
R635	=	right angle

Plating
55 = Gold
other platings on request

2.54mm pitch Board Spacer

- THT - single, dual & triple row

RoHS compliant

E-tec Interconnect

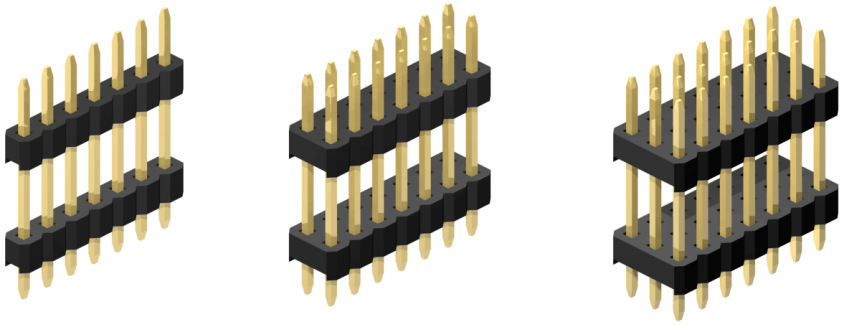

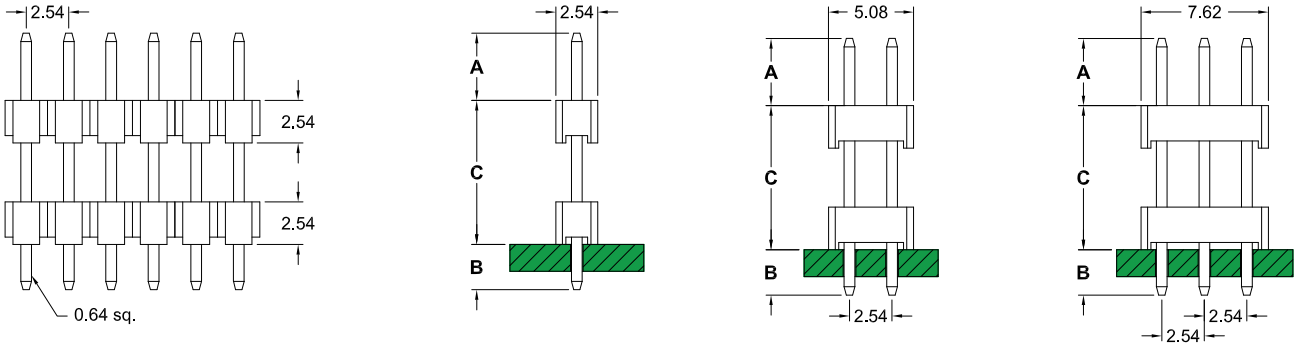

Pin Style

Pin code	DIM "A"	DIM "B"	DIM "C"	Pin code	DIM "A"	DIM "B"	DIM "C"	Pin code	DIM "A"	DIM "B"	DIM "C"	Pin code	DIM "A"	DIM "B"	DIM "C"	Pin code	DIM "A"	DIM "B"	DIM "C"
141/15	7,40	3,20	3,50	**147/08**	3,00	3,00	8,70	**228/02**	6,50	3,30	13,00	**249/02**	5,10	3,30	16,50	**302/01**	6,80	2,50	20,90
108/15	3,00	3,00	4,80	**171/01**	4,80	3,30	9,00	**249/07**	8,80	2,50	13,60	**308/05**	11,30	3,00	16,50	**270/05**	3,00	3,00	21,00
110/04	3,00	3,00	5,00	**180/01**	6,00	3,00	9,00	**200/03**	3,00	3,00	14,00	**270/03**	7,20	3,00	16,80	**316/02**	7,60	3,00	21,00
249/04	16,60	3,30	5,00	**249/11**	13,00	2,90	9,00	**230/01**	6,00	3,00	14,00	**263/02**	6,60	2,80	16,90	**276/01**	3,20	3,20	21,20
141/03	6,00	3,00	5,10	**177/05**	4,90	3,30	9,50	**262/04**	9,20	2,80	14,20	**317/01**	6,50	3,20	17,00	**318/01**	7,50	3,00	21,30
185/07	10,60	2,80	5,10	**211/05**	8,20	3,30	9,60	**235/02**	5,80	3,00	14,70	**273/01**	6,60	3,20	17,50	**342/05**	9,20	3,00	22,00
125/14	4,00	3,00	5,50	**190/03**	6,00	3,30	9,70	**290/06**	11,30	3,00	14,70	**300/01**	9,50	3,00	17,50	**290/15**	3,30	3,30	22,40
116/06	2,80	2,80	6,00	**240/07**	11,00	3,30	9,70	**212/01**	3,10	3,10	15,00	**312/05**	10,90	2,80	17,50	**320/02**	6,00	3,00	23,00
189/01	9,50	3,00	6,40	**160/01**	3,00	3,00	10,00	**260/03**	8,00	3,00	15,00	**260/02**	5,00	3,30	17,70	**340/03**	8,00	3,00	23,00
135/11	3,50	3,50	6,50	**194/01**	6,40	3,00	10,00	**266/02**	8,60	3,00	15,00	**262/03**	5,60	2,80	17,80	**378/05**	11,00	3,30	23,50
147/10	4,90	3,30	6,50	**230/03**	10,00	3,00	10,00	**283/01**	10,00	3,30	15,00	**249/03**	3,60	3,30	18,00	**323/01**	5,50	2,80	24,00
159/07	6,00	3,30	6,60	**207/01**	7,00	3,10	10,60	**378/06**	19,80	2,80	15,20	**263/01**	5,50	2,80	18,00	**340/06**	7,00	3,00	24,00
140/15	4,50	2,50	7,00	**183/02**	3,60	3,70	11,00	**274/02**	8,70	3,30	15,40	**280/03**	7,00	3,00	18,00	**450/01**	18,00	3,00	24,00
180/09	8,00	3,00	7,00	**219/02**	7,30	3,30	11,30	**215/01**	3,00	3,00	15,50	**378/04**	16,50	3,30	18,00	**312/01**	3,40	3,40	24,50
200/02	10,00	3,00	7,00	**177/04**	3,00	3,25	11,40	**285/01**	10,00	3,00	15,50	**250/03**	3,00	3,00	19,00	**360/02**	8,00	3,00	25,00
160/03	5,80	2,80	7,40	**216/10**	6,50	3,60	11,50	**270/07**	8,50	3,00	15,50	**290/07**	6,70	3,30	19,00	**340/02**	5,30	3,00	25,70
135/09	3,00	3,00	7,50	**288/01**	14,40	2,80	11,60	**308/01**	12,00	3,30	15,50	**290/12**	7,00	3,00	19,00	**312/02**	2,60	2,60	26,00
144/01	3,20	3,20	8,00	**180/02**	3,00	3,00	12,00	**248/01**	6,10	3,00	15,70	**279/01**	5,10	3,30	19,50	**358/02**	5,90	3,60	26,30
173/01	6,00	3,30	8,00	**225/03**	7,50	3,00	12,00	**261/99**	7,60	2,80	15,70	**290/14**	6,00	3,00	20,00	**342/04**	5,00	2,80	26,40
360/03	25,00	3,00	8,00	**260/08**	11,00	3,00	12,00	**220/01**	3,00	3,00	16,00	**340/08**	10,70	3,30	20,00	**330/01**	3,00	3,00	27,00
185/12	7,60	2,80	8,10	**211/01**	6,00	2,90	12,20	**238/02**	5,00	2,80	16,00	**362/03**	13,00	3,20	20,00	**365/03**	6,50	3,00	27,00
186/05	6,60	3,60	8,40	**180/10**	2,70	2,70	12,60	**250/04**	6,00	3,00	16,00	**400/03**	17,00	3,00	20,00	**340/99**	3,00	3,00	28,00
155/11	3,50	3,50	8,50	**177/02**	2,50	2,50	12,70	**296/01**	10,60	3,00	16,00	**265/04**	3,10	3,10	20,30	**378/03**	6,50	3,30	28,00
210/03	9,00	3,50	8,50	**190/04**	3,00	3,00	13,00	**244/01**	5,30	2,60	16,50	**288/03**	5,30	2,80	20,70	**390/02**	8,00	3,00	28,00

all dimensions mm

Many other dimensions available on request

Specifications

Current rating	3 A	Operating temperature	- 40°C to +105°C
Insulation resistance	1000 MΩ min.	Contact material *(RoHS compliant)*	Brass
Withstanding voltage	500 V AC	Insulator material *(RoHS compliant)*	PBT or PA6T UL 94 V-0 *Standard :* PBT

How to order

SP x - xxx - S xxx/xx - xx

Rows	Nbr of pins	Insulator	Pin code	Plating
1 = single row **2** = dual row **3** = triple row	single row = **002** to **040** dual row = **004** to **080** triple row = **009** to **120**	**S** = PBT **SH** = PA6T	see above table	**55** = Gold *(standard)* **99** = Tin *(leadfree)* **95** = Tin/Gold *(tin leadfree)* other platings on request

2.54mm pitch Pin Header

- SMT - single & dual row

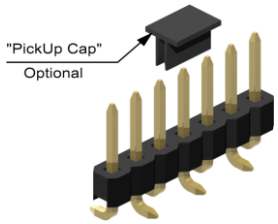

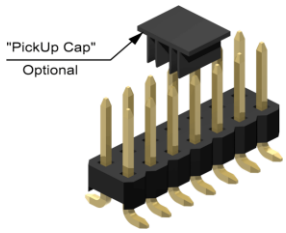

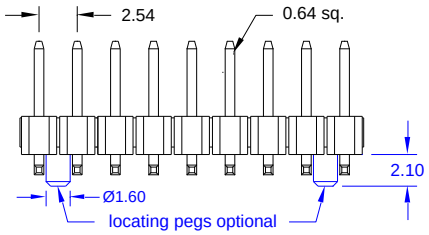

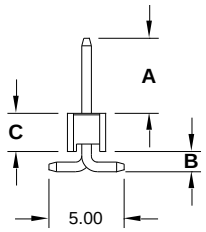

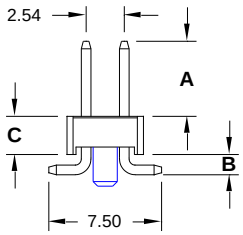

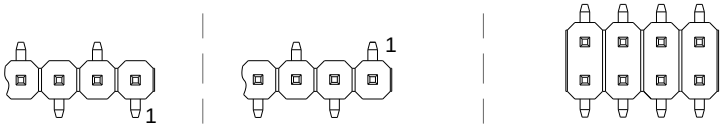

Foot Style: **140** **141** **140**

Application and Features

- ***Standard: Tube packing and without "PickUp Cap"***
- Standard Pin code **01**, many pin dimensions on request
- Mating with 2.54mm Female Headers

PCB Surface Mount Layout

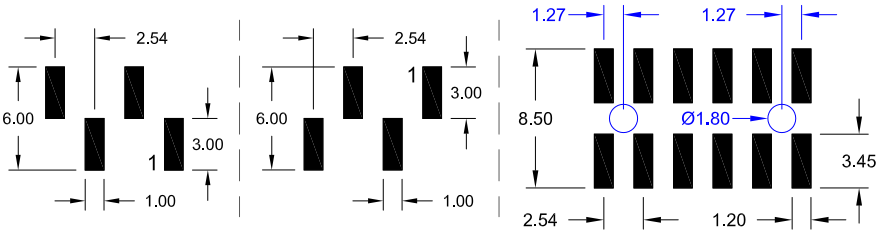

Foot Style: **140** (single row) **141** (single row) **140** (dual row)

Specifications

Current rating	3 A
Insulation resistance	1000 MΩ min.
Withstanding voltage	500 V AC

Operating temperature	- 40°C to +105°C
Processing temperature	+250°C +0/-5°C for 5sec.
Contact material *(RoHS compliant)*	Brass
Insulator material *(RoHS compliant)*	PA6T UL 94 V-0

How to order

SS x - xxx - X 14x / xx - 55 X

Rows	Nbr of pins	Insulator Style	Foot Style
1 single row	**002** to **040**	**H** (=Standard) if DIM"C"=2.54mm **TH** if DIM"C"=1.50mm **Please note:** 1.50mm Insulator is only available without locating peg.	**140** **141** Pls. choose **140** style if odd pin count.
2 dual row	**004** to **080**		**140**

Pin code	DIM "A"	DIM "B"	DIM "C"
00	5.00	1.00	1.50
01	6.00	1.82	2.54
02	10.70	1.27	2.54
03	14.20	0.64	2.54
04	6.00	0.64	2.54
05	10.70	1.82	2.54
06	6.00	1.27	2.54
07	4.00	1.00	1.50
08	9.60	1.90	2.54
09	8.13	1.27	2.54
10	3.00	1.96	2.54
11	8.10	0.72	2.54
12	3.23	3.22	2.54
13	4.85	2.30	2.54
other dimensions on request			

Plating

55 = Gold

other platings on request

Options

without "locating pegs"

A = Tube packing; with „PickUp Cap"
B = Reel packing; with „PickUp Cap"

with "locating pegs"
(only available for dual row Pin Headers)

C = Tube packing; w/o „PickUp Cap"
D = Tube packing; with „PickUp Cap"
E = Reel packing; with „PickUp Cap"

2.54mm pitch Board Spacer

- SMT -

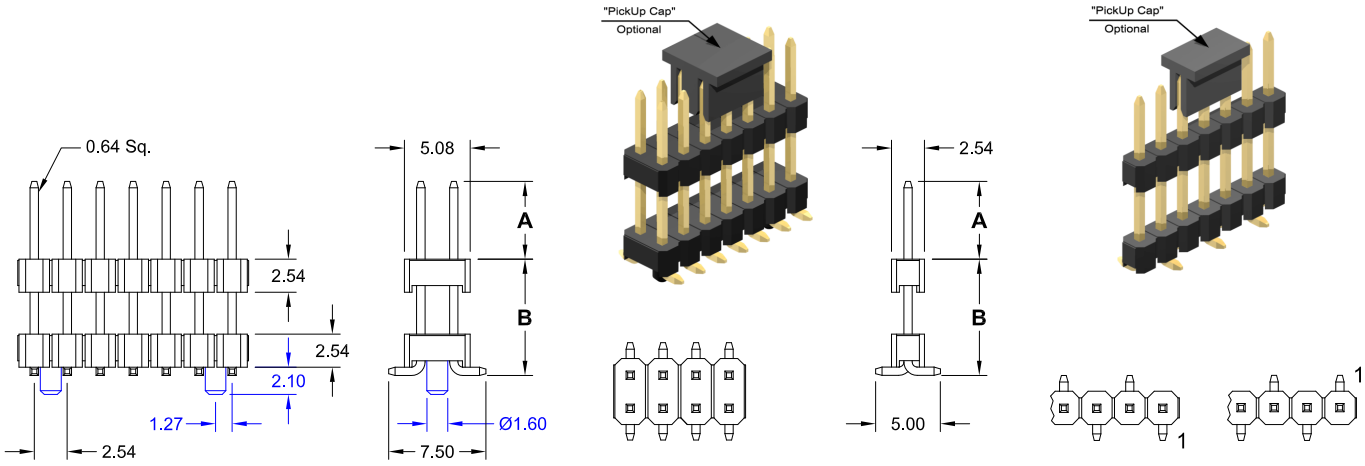

Foot Style: **160** **160** **161**

Application and Features

- ***Standard: Tube packing, without "locating pegs" and without "PickUp Cap"***
- Designed for "Board to Board" spacing
- Variable terminal length available
- Mate with Female Header 2.54mm pitch

PCB Surface Mount Layout

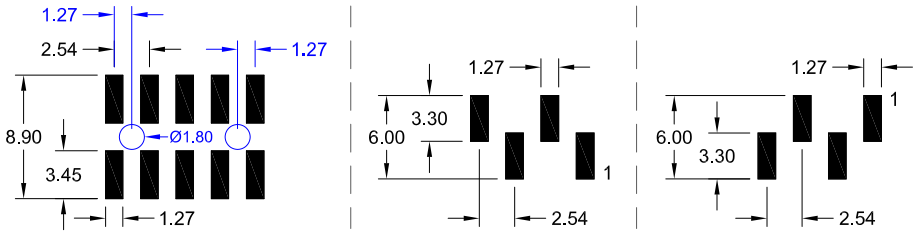

Foot Style: **160** (dual row) **160** (single row) **161** (single row)

Specifications

Current rating	3 A
Insulation resistance	1000 MΩ min.
Withstanding voltage	500 V AC

Operating temperature	- 40°C to +105°C
Processing temperature	+250°C +0/-5°C for 5sec.
Contact material *(RoHS compliant)*	Copper alloy
Insulator material *(RoHS compliant)*	PA6T UL 94 V-0

How to order

SP x - xxx - H xxx / xx - 55 X

Rows	Nbr of pins	Foot Style
1 single row	**002** to **040**	**160** **161** Pls. choose **160** Style if odd pin count.
2 dual row	**004** to **080**	**160**

Pin code	DIM "A"	DIM "B"
16	3,50 mm	5,30 mm
03	5,50 mm	6,40 mm
12	5,50 mm	7,50 mm
04	7,50 mm	9,40 mm
07	5,90 mm	10,60 mm
09	3,70 mm	10,70 mm
01	6,00 mm	11,40 mm
15	6,90 mm	12,50 mm
14	8,80 mm	13,60 mm
06	5,50 mm	14,00 mm
17	7,00 mm	14,50 mm
05	6,00 mm	15,50 mm
13	8,80 mm	16,10 mm
02	4,50 mm	17,00 mm
08	6,00 mm	28,00 mm
10	2,70 mm	28,30 mm
11	4,00 mm	34,30 mm

other dimensions on request

Plating

55 = Gold

other platings on request

Options

without "locating pegs"

A = Tube packing; with „PickUp Cap"
B = Reel packing; with „PickUp Cap"

with "locating pegs"
dual row only!

C = Tube packing; w/o „PickUp Cap"
D = Tube packing; with „PickUp Cap"
E = Reel packing; with „PickUp Cap"

2.54mm pitch Pin Header - slanted - - SMT - single and dual row

RoHS compliant

E-tec Interconnect

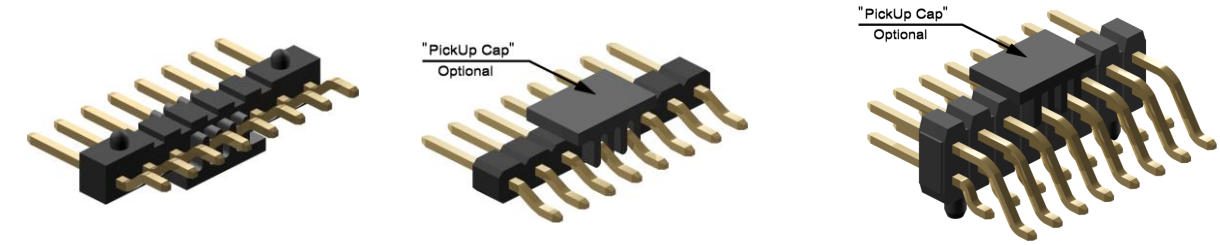

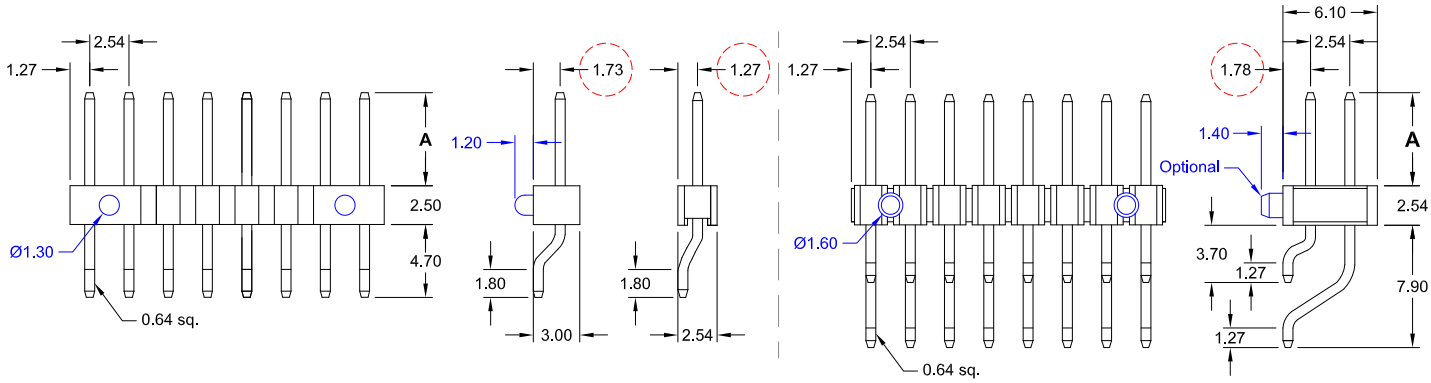

Style **SR1** with locating peg without locating peg Style **SR2**

PCB Surface Mount Layout "single row"

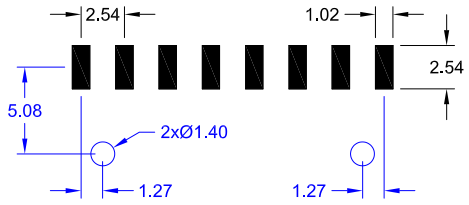

PCB Surface Mount Layout "dual row"

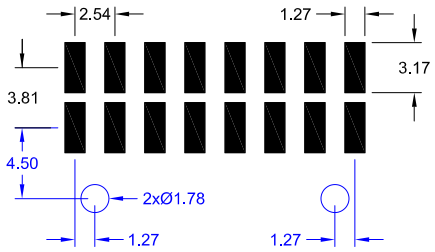

Specifications

Current rating	3 A
Insulation resistance	1000 MΩ min.
Withstanding voltage	500 V AC

Operating temperature	- 40°C to +105°C
Processing temperature	+250°C +5/-0°C for 5sec.
Contact material *(RoHS compliant)*	Copper alloy
Insulator material *(RoHS compliant)*	SR1 = PA6T UL 94 V-0 SR2 = LCP UL 94 V-0

How to order

SR x - xxx - H xxx/xx - xx X

Rows	Nbr of pins
1 single row	*without locating pegs* **002** to **040** *with locating pegs* **003** to **030**
2 dual row	**006** to **080**

Pin code	DIM "**A**"
135/00	3.00 mm
135/01	3.60 mm
135/02	6.00 mm
135/03	6,80 mm
135/04	7.20 mm
135/05	7.40 mm
135/06	10.70 mm
135/07	10.40 mm
135/08	5.85 mm
135/09	8.15 mm
135/10	10.00 mm
other dimensions on request	

Plating

55 = Gold

95 = Tin/Gold *(tin leadfree)*

other platings on request

Options
(standard: Tube packing and w/o PickUp Cap)

without "locating pegs"

A = Tube packing; with „PickUp Cap"
B = Reel packing; with „PickUp Cap"

with "locating pegs"

C = Tube packing; without „PickUp Cap"
D = Tube packing; with „PickUp Cap"
E = Reel packing; with „PickUp Cap"

2.54mm pitch Box Header

- THT - right angle - straight - raised

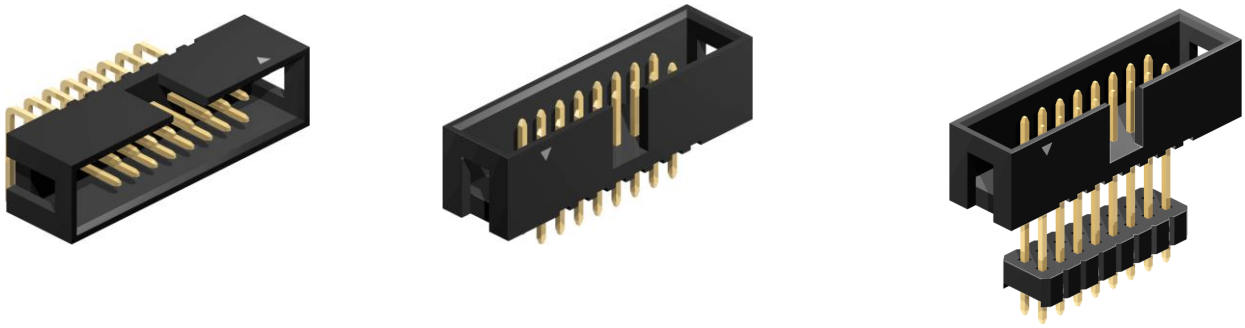

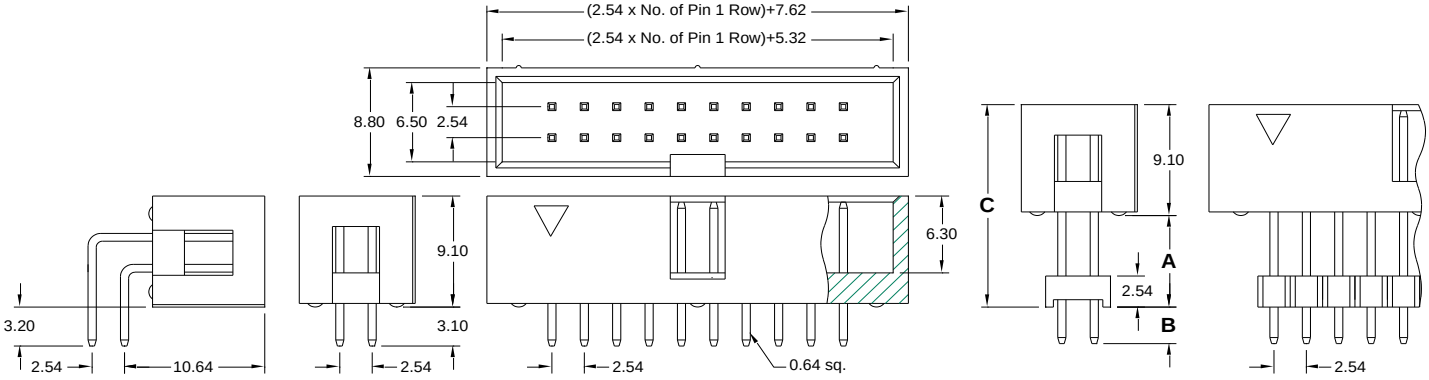

Style **R920** **S920** **Dxxx**

Application and Features

- Mating devices for Female Headers, solder tail and IDC Type
- Reliable flat cable to PCB connection
- No ejection latches for space saving

PCB Hole Layout

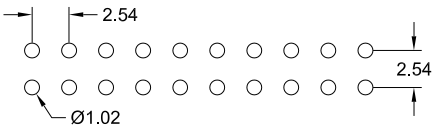

Specifications

Current rating	3 A	Operating temperature	- 40°C to +105°C
Insulation resistance	1000 MΩ min.	Contact material *(RoHS compliant)*	Brass
Withstanding voltage	500 V AC	Insulator material *(RoHS compliant)*	PBT UL 94 V-0

How to order

SLS - xxx - X xxx - 55

Nbr of pins

"S" & "R" Style:
006; 008; 010; 012; 014; 016
020; 024; 026; 030; 034; 040
044; 050; 060; 064

"D" Style:
006; 008; 010; 012; 014; 016
020; 024; 026; 030; 034; 040
050; 060; 064

Style

S920 = straight
R920 = right angle
Dxxx = raised Style

Pin code for "Dxxx" = raised Style	DIM "A" (mm)	DIM "B" (mm)	DIM "C" (mm)
141	5.00	3.00	14.10
166	7.50	3.00	16.60
232	14.10	3.00	23.20
235	14.40	3.00	23.50
other dimensions on request			

Plating

55 = Gold

other platings on request

2.54mm pitch Box Header

- SMT -

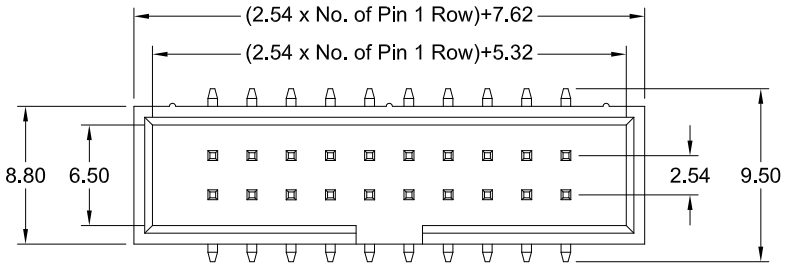

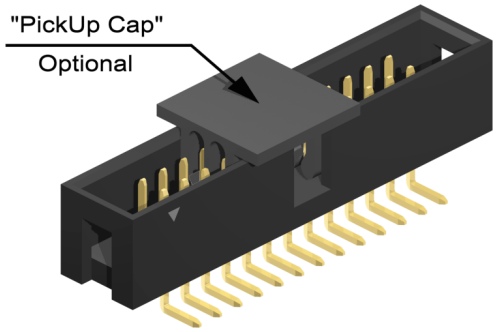

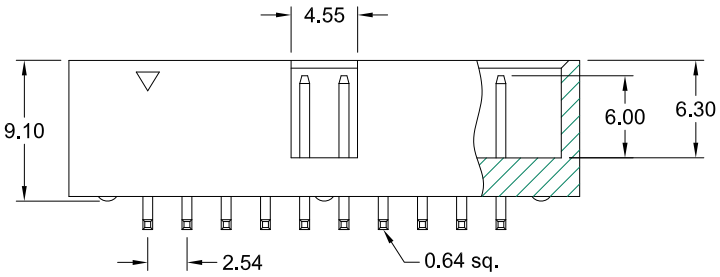

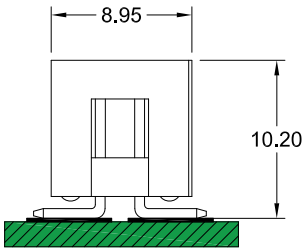

Application and Features

- ***Standard: Tray packing and without "PickUp Cap"***
- Also available "Reel" packing
- Mating devices for Female Headers, solder tail and IDC Type
- Reliable flat cable to PCB connection
- No ejector latches for space saving

PCB Surface Mount Layout

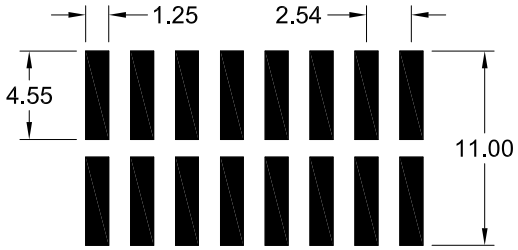

Specifications

Current rating	3 A
Insulation resistance	1000 MΩ min.
Withstanding voltage	500 V AC

Operating temperature	- 40°C to +105°C
Processing temperature	+250°C +0/-5°C for 5sec.
Contact material *(RoHS compliant)*	Brass
Insulator material *(RoHS compliant)*	PA6T UL 94 V-0

How to order

SLS - xxx - H885 - 55 / X

Nbr of pins
006; 008; 010; 012
014; 016; 020; 024
026; 030; 034; 040
044; 050

Plating
55 = Gold
other platings on request

Packing and „PickUp Cap" Option		
F	=	Tray packing; with „PickUp Cap"
T	=	Tube packing; without „PickUp Cap"
A	=	Tube packing; with „PickUp Cap"
B	=	Reel packing; with „PickUp Cap"

2.54mm pitch Box Header
- THT - with metal ejection latches

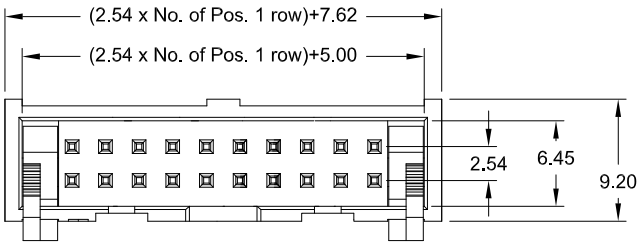

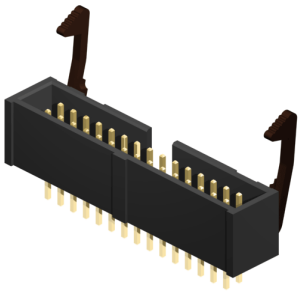

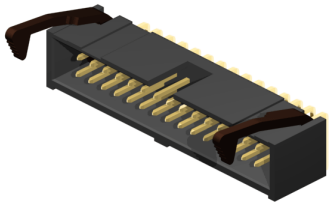

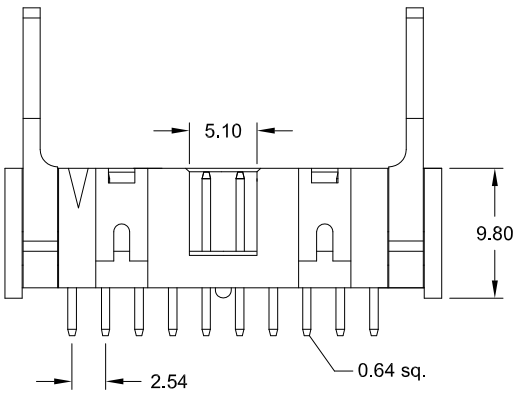

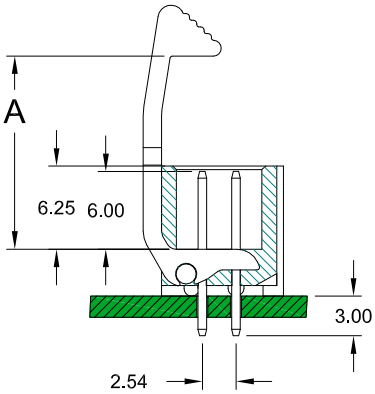

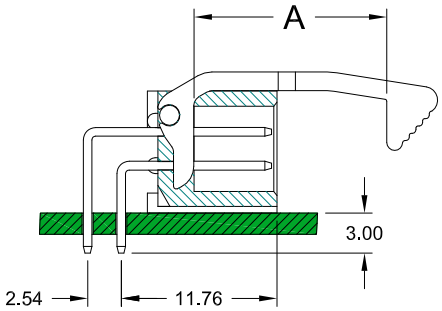

Style **S103** **R103**

Application and Features

- Mating devices for Female Headers IDC Type
- Reliable flat cable to PCB connection
- Ejection latches for easy handling

PCB Hole Layout

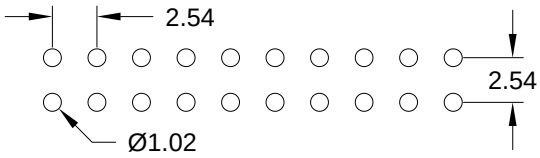

Specifications

Current rating	3 A
Insulation resistance	1000 MΩ min.
Withstanding voltage	1000 V AC

Operating temperature	- 40°C to +105°C
Contact material *(RoHS compliant)*	Copper alloy
Insulator material *(RoHS compliant)*	PBT UL 94 V-0 *Standard*: black

How to order

SLS - xxx - X 103 - 55 / X

Nbr of pins	Style	Plating	Latch Style
006; 008; 010 **014; 016; 020** **026; 030; 034** **040; 050; 060** **064**	**S** = straight **R** = right angle	**55** = Gold other platings on request	**S** = short latch DIM "**A**" = 10.65 mm **L** = long latch DIM "**A**" = 14.55 mm

2.54mm pitch Female Header
- THT - 8.50mm profile

RoHS compliant

E-tec Interconnect

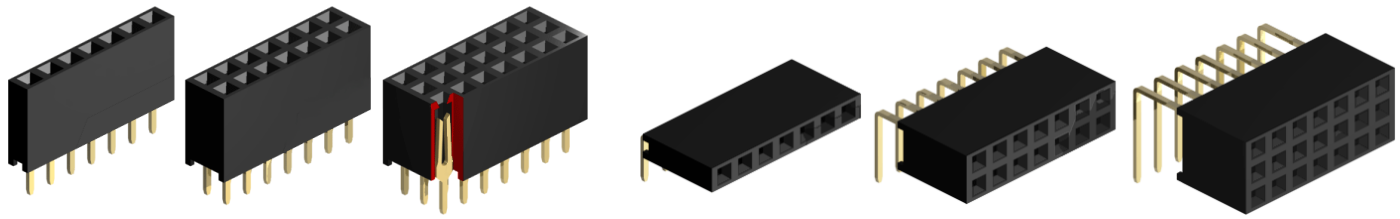

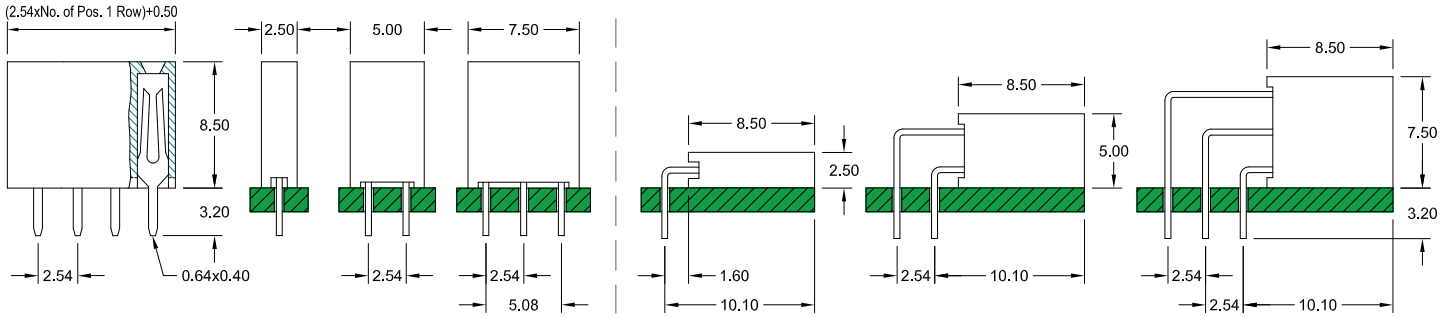

Style **S842** **R842**

PCB Hole Layout

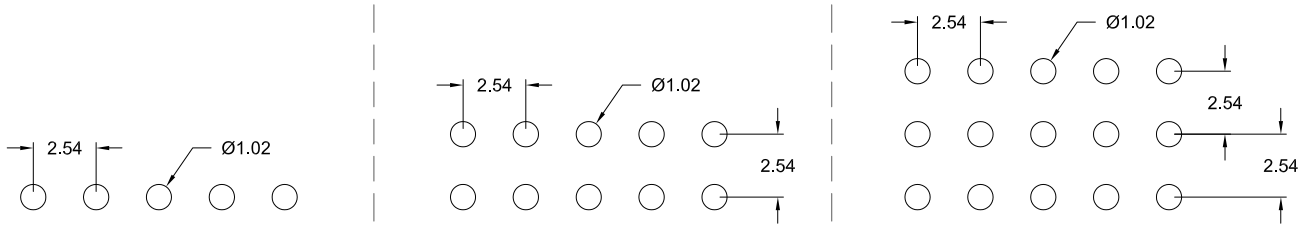

Application and Features

- Standard profile, 8.50 mm height for straight connector style
- Hi-rel fork contacts
- Accepts 0.64 mm square pins

Specification

Current rating	3 A
Insulation resistance	1000 MΩ min.
Contact resistance	20 mΩ max.
Withstanding voltage	500 V AC
Operating temperature	- 40°C to +105°C
Contact material *(RoHS compliant)*	Brass
Insulator material *(RoHS compliant)*	PBT UL 94 V-0

How to order

BL x - xxx - X842 - 55

Rows	Nbr of contacts	Connector Style	Plating
1 = single row	single row = **002** to **040**	**S842** = straight	**55** = Gold
2 = dual row	dual row = **004** to **080**	**R842** = right angle	other platings on request
3 = triple row	triple row = **009** to **120**	dimensions see drawings above	

2.54mm pitch Female Header
- THT - 5.70mm profile

RoHS compliant

E-tec Interconnect

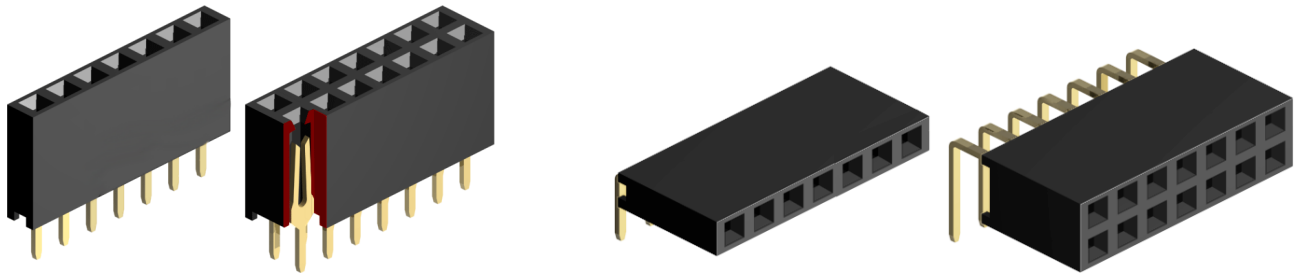

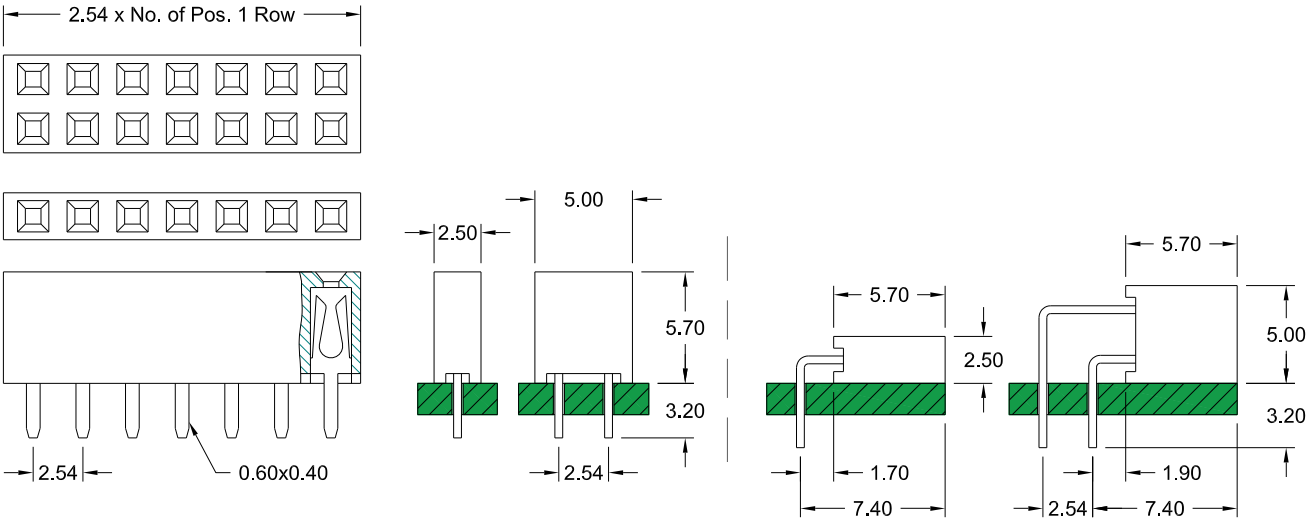

Style **S570** **R570**

Specifications

Current rating		3 A
Insulation resistance		1000 MΩ min.
Contact resistance		20 mΩ max.
Withstanding voltage		500 V AC
Operating temperature		- 40°C to +105°C
Contact material	*(RoHS compliant)*	Phosphor Bronze
Insulator material	*(RoHS compliant)*	PBT UL 94 V-0

PCB Hole Layout

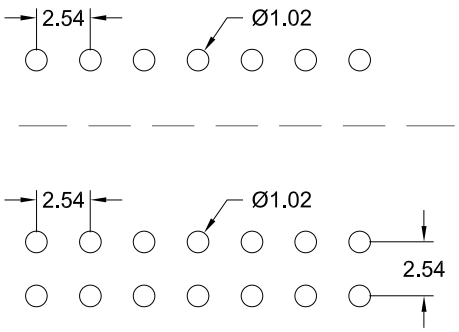

How to order

BL x - xxx - X 570 - 55

Rows	Nbr of contacts	Connector Style	Plating
1 = single row	single row = **002** to **040**	**S** = straight	**55** = Gold
2 = dual row	dual row = **004** to **080**	**R** = right angle	other platings on request

2.54mm pitch Female Header
- THT - folded contacts

RoHS compliant

E-tec Interconnect

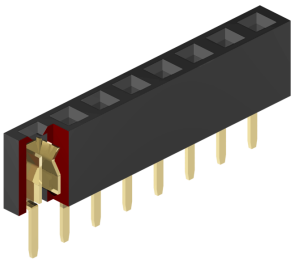

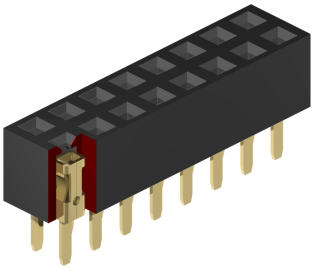

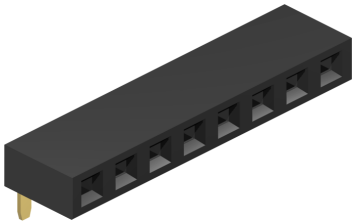

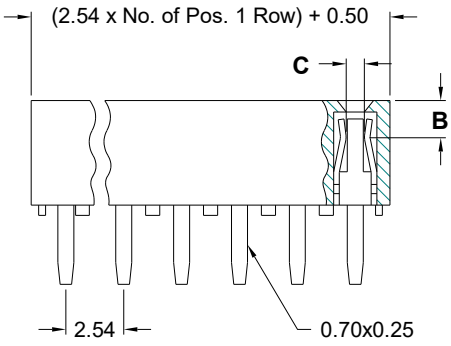

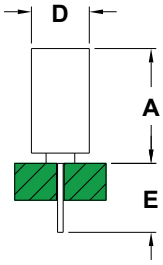

single row

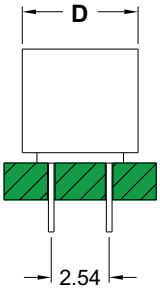

dual row

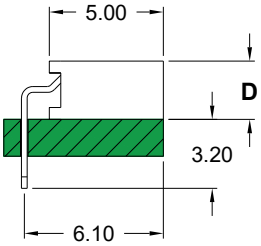

right angle

PCB Hole Layout

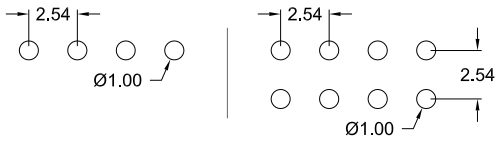

Specifications

Current rating		3 A
Insulation resistance		1000 MΩ min.
Contact resistance		20 mΩ max.
Withstanding voltage		500 V AC
Operating temperature		- 40°C to +105°C
Contact material	*(RoHS compliant)*	Phosphor Bronze
Insulator material	*(RoHS compliant)*	PBT UL 94 V-0

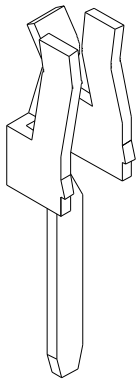

Contact Style 1

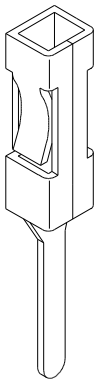

Contact Style 2

How to order

BF x - xxx - Xxxx - 55

Rows	Nbr of contacts
1 =1 row **2** =2 rows	**002** to **040** (1 row) **004** to **080** (2 rows)
1 =1 row	**002** to **040** (1 row)
1 =1 row **2** =2 rows	**002** to **030** (1 row) **004** to **060** (2 rows)
1 =1 row **2** =2 rows	**002** to **040** (1 row) **004** to **080** (2 rows)
1 =1 row **2** =2 rows	**002** to **040** (1 row) **004** to **080** (2 rows)

Code	Connector Style	Contact Style	DIM "**A**" (mm)	DIM "**B**" (mm)	DIM "**C**" (mm)	DIM "**D**" (mm)	DIM "**E**" (mm)
S500	straight	1	5.00	1.50	0.42	2.50 (1 row) 5.00 (2 rows)	3.20
R500	R/A	1		1.50	0.42	2.50 (1 row)	3.20
S680	straight	2	6.80	3.50	0.50	3.50 (1 row) 5.80 (2 rows)	3.50
S710	straight	1	7.10	1.50	0.25	2.50 (1 row) 5.00 (2 rows)	3.20
S850	straight	1	8.50	1.50	0.25	3.00 (1 row) 5.50 (2 rows)	3.20

Plating
55 = Gold other platings on request

2.54mm pitch Female Header
- THT - Elevated

RoHS compliant

E-tec Interconnect

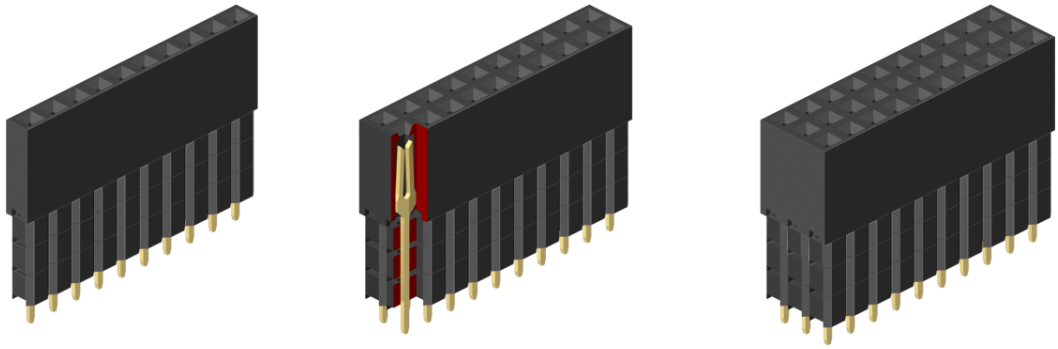

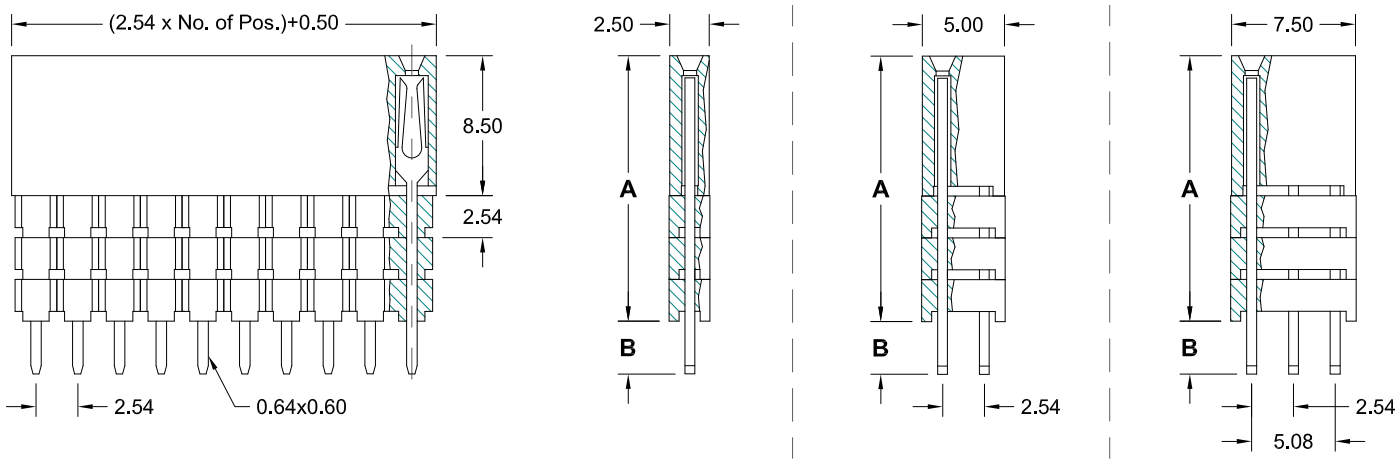

single row dual row triple row

Application and Features

- Various heights for Board-to-Board connections
- Ideal solution for PC/104-*Plus* Systems
- Accepts 0.64mm square pins
- Hi-rel fork contact design

PCB Hole Layout

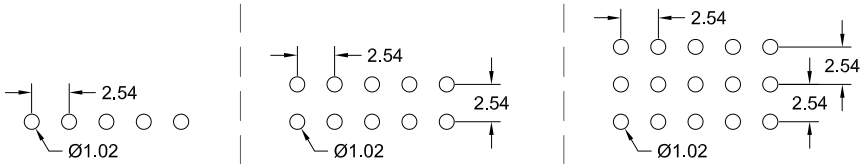

Specifications

Current rating	3 A
Insulation resistance	1000 MΩ min.
Contact resistance	20 mΩ max.
Withstanding voltage	500 V AC
Operating temperature	- 40°C to +105°C
Contact material *(RoHS compliant)*	Phosphor Bronze
Insulator material *(RoHS compliant)*	PBT UL 94 V-0

How to order

BE x - xxx - S xxx - 55

Rows	
1	= single row
2	= dual row
3	= triple row

Nbr of contacts			
single row	=	**002**	to **040**
dual row	=	**004**	to **080**
triple row	=	**006**	to **120**

Style	DIM "A"	DIM "B"
111	11.05 mm	2.30 mm
112	11.05 mm	7.35 mm
113	11.05 mm	12.20 mm
131	13.59 mm	4.85 mm
132	13.59 mm	9.65 mm
161	16.13 mm	2.30 mm
162	16.13 mm	7.10 mm
181	18.67 mm	4.60 mm
other dimensions on request		

Plating		
55	=	Gold

other platings on request

2.54mm pitch Female Header

- THT - dual entry type 8.50mm profile

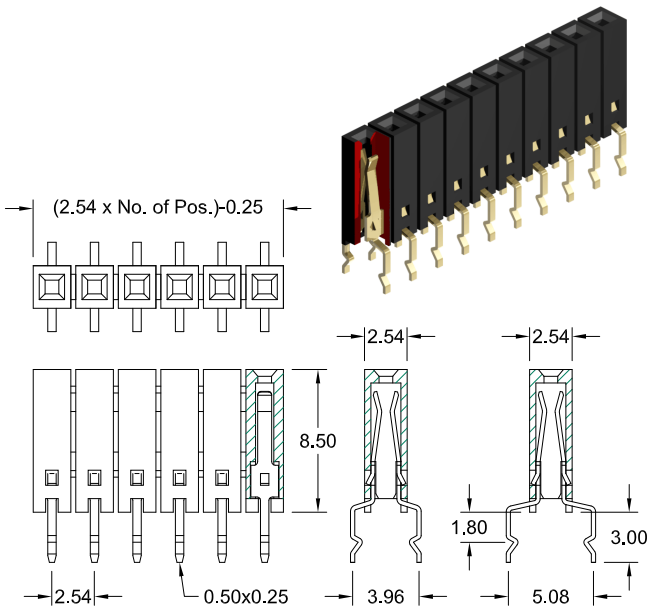

BB1-4 xx- **BB1-5** xx-

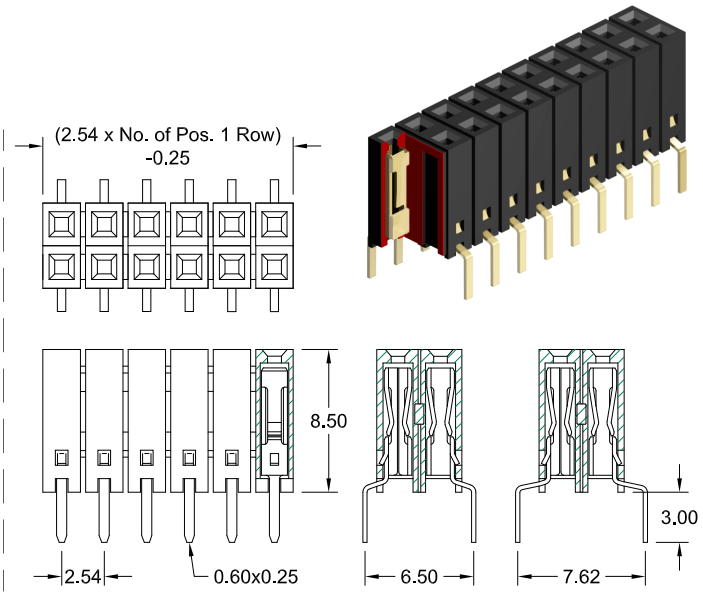

BB2-6 xx- **BB2-7** xx-

PCB Hole Layout

single row - 3.96 mm & 5.08 mm pin spacing

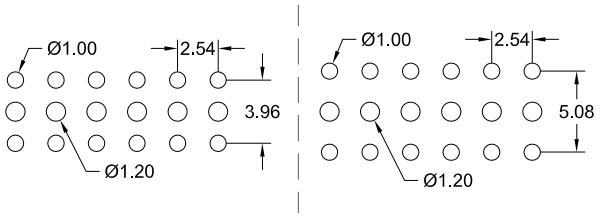

dual row - 6.50 mm & 7.62 mm pin spacing

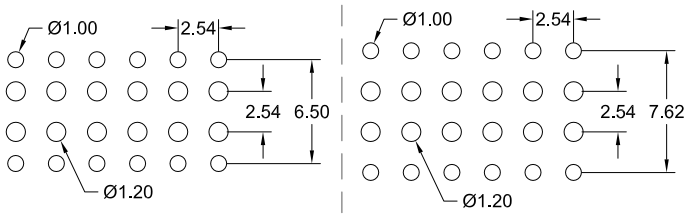

Application and Features

- Hi-rel dual beam contact assures reliable PCB connections
- Dual entry design for board stacking
- Accepts 0.64mm square pins
- Stand-off's facilitate post solder cleaning

Specifications

Current rating	3 A
Insulation resistance	1000 MΩ min.
Contact resistance	20 mΩ max.
Withstanding voltage	500 V AC
Operating temperature	- 40°C to +105°C
Contact material *(RoHS compliant)*	Phosphor Bronze
Insulator material *(RoHS compliant)*	LCP UL 94 V-0

How to order

BB x - x xx - B850 - 55

Rows	Pin spacing	Nbr of contacts	Plating
1 = single row	**4** = 3.96 mm **5** = 5.08 mm	single row = **02** to **40**	**55** = Gold
2 = dual row	**6** = 6.50 mm **7** = 7.62 mm	dual row = **04** to **80**	

2.54mm pitch Female Header

- THT - dual entry type low profile

RoHS compliant

E-tec Interconnect

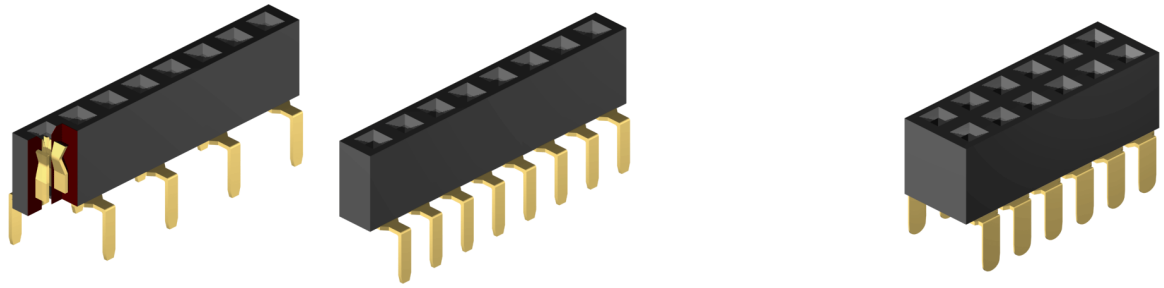

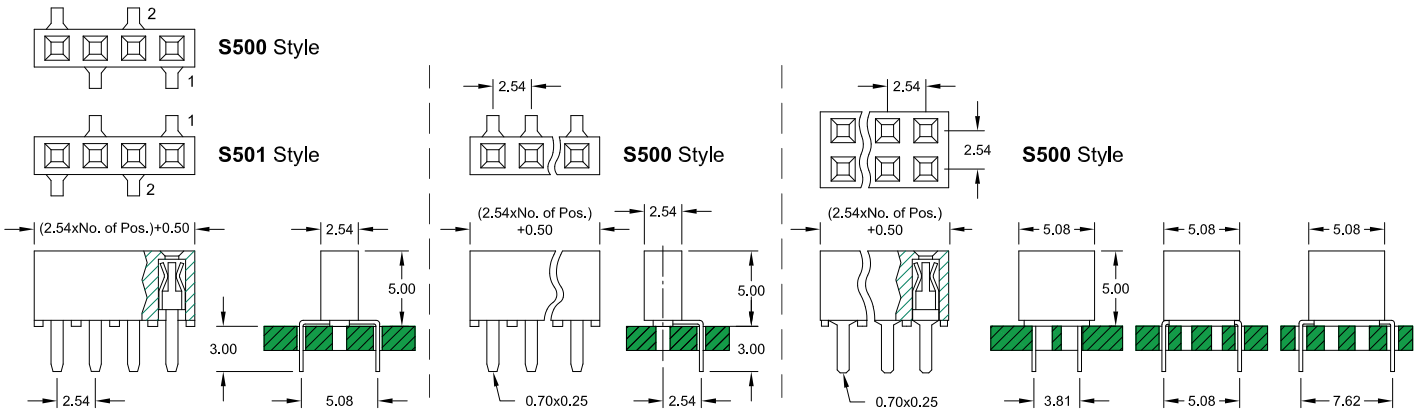

BB1-5 xx- **BB1-1** xx- **BB2-3** xx- **BB2-5** xx- **BB2-7** xx-

PCB Hole Layout

1 row - zig-zag pin-out

S500 Style **S501** Style

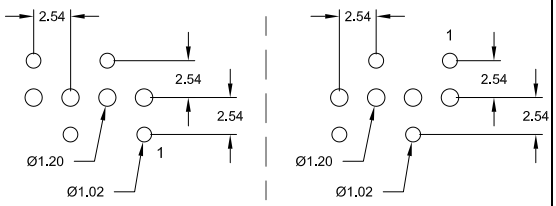

1 row

single sided pin-out

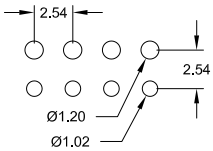

2 rows - pin spacing pin-out

3.81mm 5.08mm 7.62mm

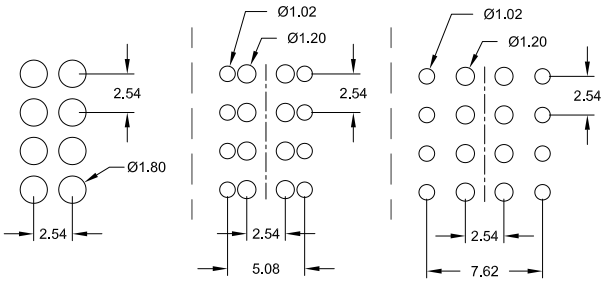

Application and Features

- Hi-rel dual beam contact assures reliable PCB connections
- Dual entry design for board stacking
- Accepts 0.64mm square pins
- Stand-off's facilitate post solder cleaning

Specifications

Current rating	3 A
Insulation resistance	1000 MΩ min.
Contact resistance	20 mΩ max.
Withstanding voltage	500 V AC
Operating temperature	- 40°C to +105°C
Contact material *(RoHS compliant)*	Phosphor Bronze
Insulator material *(RoHS compliant)*	PBT UL 94 V-0

How to order

BB x - x xx - S xxx - 55

Rows	Pin spacing	Nbr of contacts	Foot Style	Plating
1 = single row	**1** = single side only **5** = 5.08mm zig-zag	*single row* **02** to **40**	*single row* **500** & **501** Pls. choose **500** Style if odd pin count.	**55** = Gold other platings on request
2 = dual row	**3** = 3.81 mm **5** = 5.08 mm **7** = 7.62 mm	*dual row* **04** to **80**	*dual row* **500**	

2.54mm pitch Female Header
- THT - for “Box Header” mating

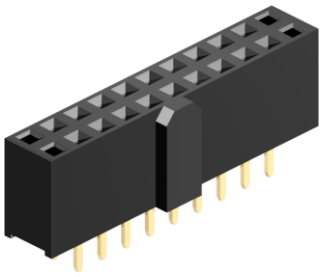

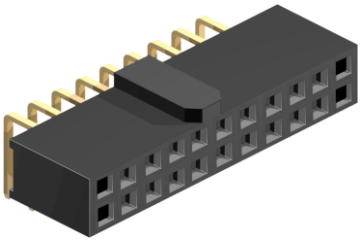

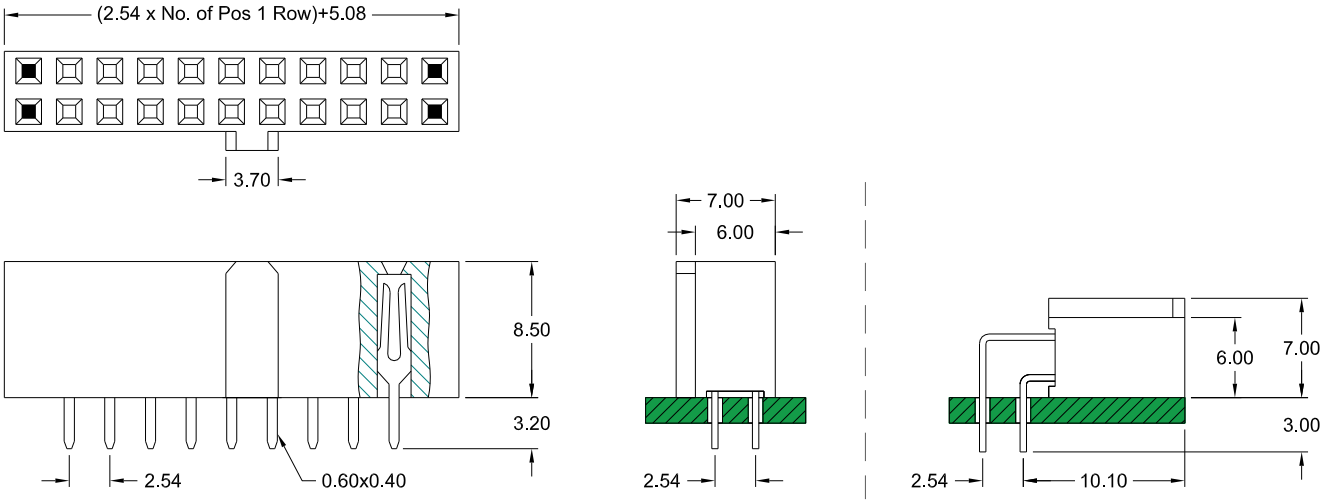

Application and Features

Mating with Box (Shrouded) Header 2.54mm pitch

SLS-xxx-S920-xx, SLS-xxx-R920-xx, SLS-xxx-Dxxx-xx & SLS-xxx-H885-xx/X

Standard with polarization bump.

Specifications

Current rating	3 A
Insulation resistance	1000 MΩ min.
Contact resistance	20 mΩ max.
Withstanding voltage	500 V AC
Operating temperature	- 40°C to + 105°C
Contact material *(RoHS compliant)*	Phosphor Bronze
Insulator Material *(RoHS compliant)*	PA6T UL 94 V-0

PCB Hole Layout

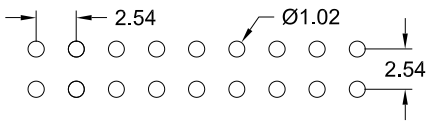

How to order

BW2 - xxx - X 850 - 55/P

Nbr of contacts	Connector Style	Plating
006; 008; 010; 014 **016; 020; 024; 026** **030; 034; 040; 044** **048; 050; 060; 064**	**S** = straight **R** = right angle	**55** = Gold other platings on request

2.54mm pitch Female Header
- THT - side entry type

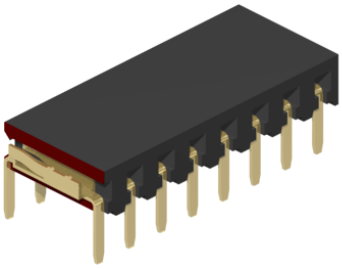

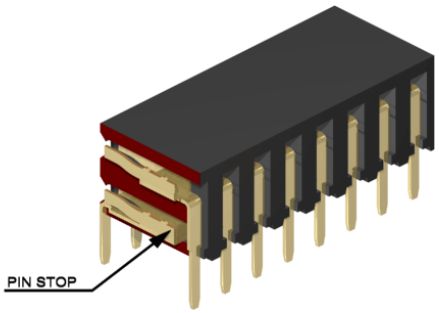

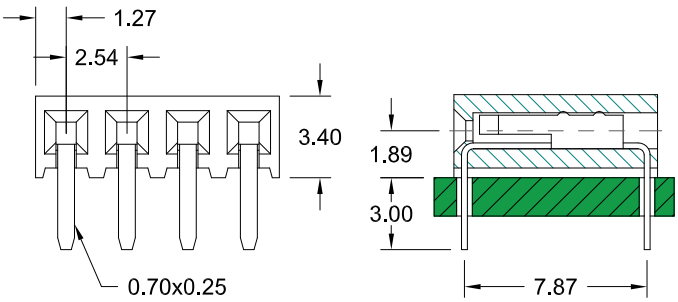

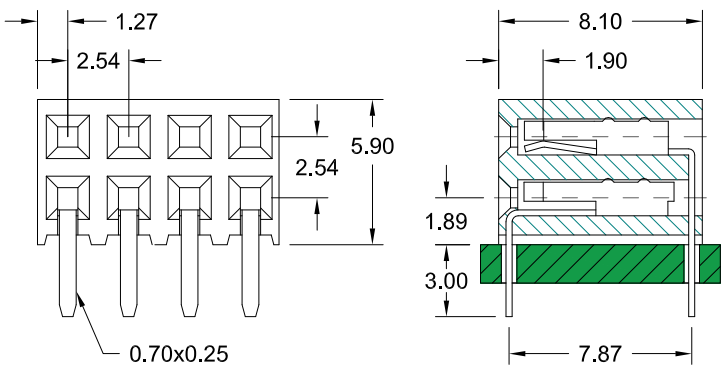

Application and Features

- ***Standard: Tube packing***
- Hi-rel dual beam contact with "Pin Stop" assures reliable connections
- Accepts 0.64 mm square pins; Pin Header 2.54 mm x 2.54 mm
- 3.40 mm & 5.90 mm height above board
- Stand-off's facilitate post solder cleaning

PCB Hole Layout

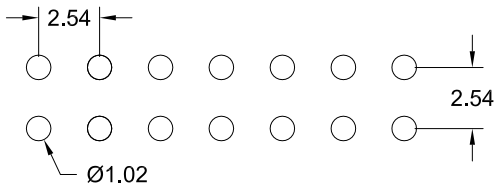

Specifications

Current rating	3 A
Insulation resistance	1000 MΩ min.
Contact resistance	20 mΩ max.
Withstanding voltage	500 V AC

Operating temperature		- 40°C to + 105°C
Contact material	*(RoHS compliant)*	Phosphor Bronze
Insulator material	*(RoHS compliant)*	PBT UL 94 V-0

How to order

BH x - xxx - R850 - 55

Rows	Nbr of contacts	Plating
1 = single row	single row = **003** to **040**	**55** = Gold
2 = dual row	dual row = **004** to **080**	other platings on request

2.54mm pitch Female Header - SMT -

Top & Bottom Entry 7.50mm & 5.00mm profile

RoHS compliant

E-tec Interconnect

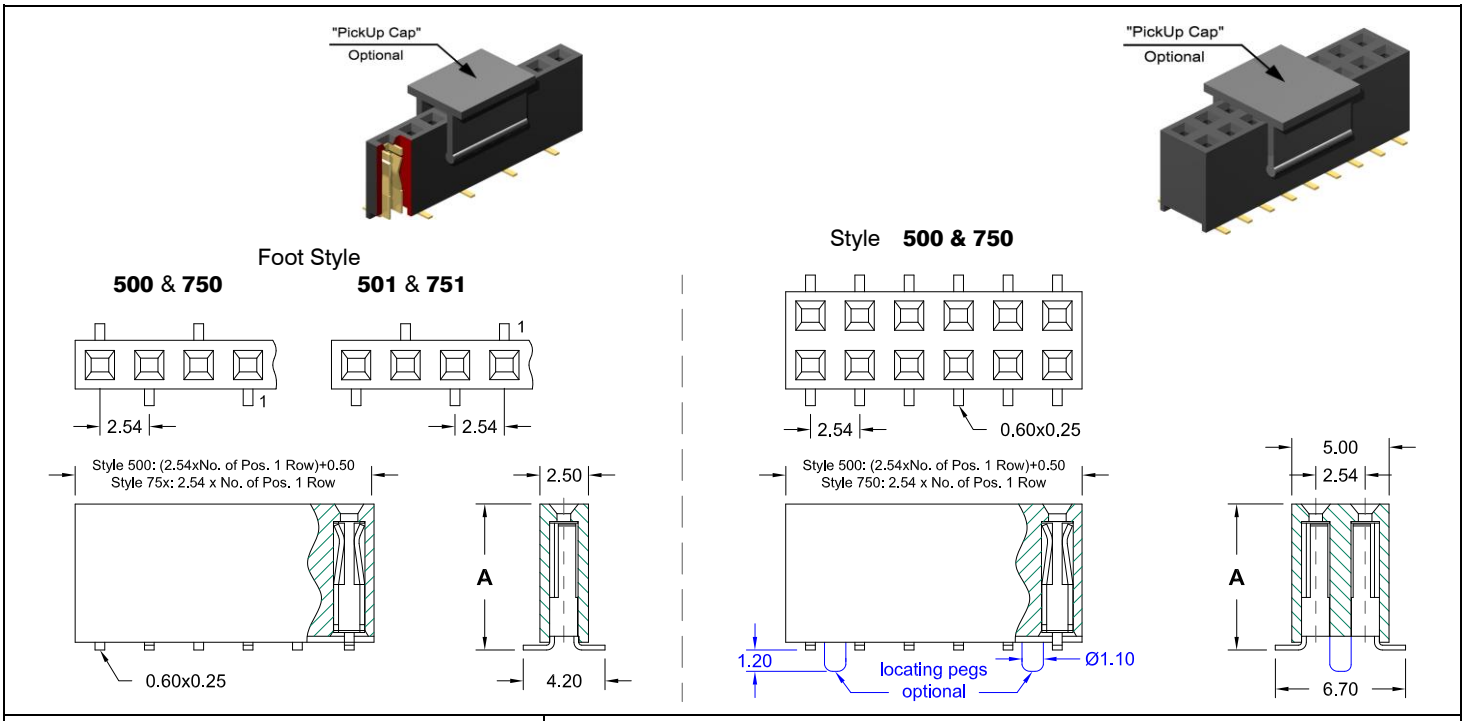

Application and Features

- ***Standard: Tube packing and without "PickUp cap"***
- 5.00mm & 7.50mm height above board. Hi-rel dual beam contacts.
- Mating with 2.54mm pitch, 0.64mm sq. or round Pin Headers.

PCB Surface Mount & Hole Layout

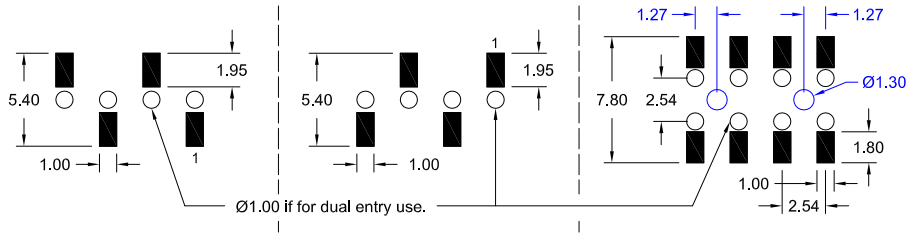

Foot Style **500 & 750** **501 & 751** **500 & 750**

Specifications

Current rating	3 A	Operating temperature	-40° C to +105°C
Insulation resistance	1000 MΩ min.	Processing temperature	+250°C +0/-5°C for 5sec.
Contact resistance	20 mΩ max.	Contact material *(RoHS compliant)*	Phosphor Bronze
Withstanding voltage	500 V AC	Insulator material *(RoHS compliant)*	PA6T UL 94 V-0

How to order

BS x - xxx - H xxx - 55/ X

Rows	Nbr of contacts	Style	Plating	Options
1 single row	**002** to **040**	**500** DIM "A" = 5.00 mm ***501*** *(optional foot Style)* **750** DIM "A" = 7.50 mm ***751*** *(optional foot Style)* Pls. choose **500** or **750** Style if odd pin count	**55** = Gold other platings on request	**A** = Tube packing; with „PickUp Cap" **B** = Reel packing; with „PickUp Cap"
2 dual row	**004** to **080**	**500** DIM "A" = 5.00 mm **750** DIM "A" = 7.50 mm		**without "locating pegs"** **A** = Tube packing; with „PickUp Cap" **B** = Reel packing; with „PickUp Cap" **with "locating pegs"** **C** = Tube packing; without „PickUp Cap" **D** = Tube packing; with „PickUp Cap" **E** = Reel packing; with „PickUp Cap"

2.54mm pitch Female Header - SMT -
Top & Bottom Entry 3.65mm profile

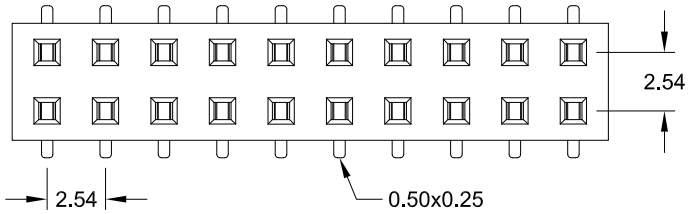

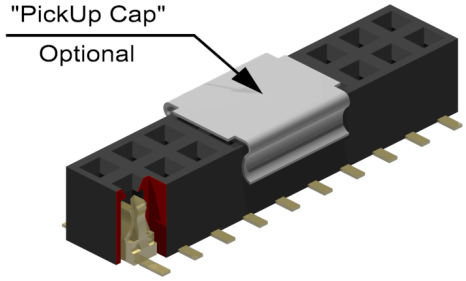

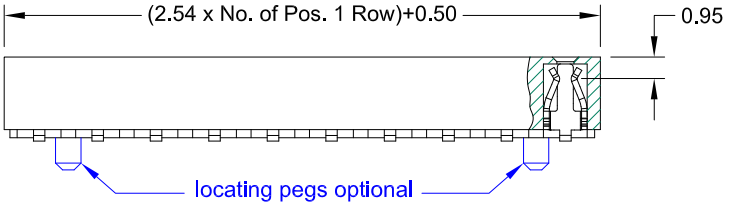

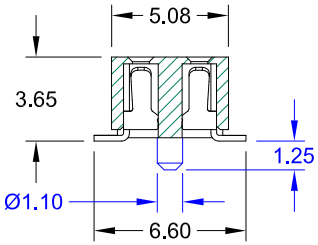

Application and Features

- ***Standard:***
  Tube packing and without "PickUp Cap"
- 3.65mm height above board.
- Hi-rel dual beam contacts
- Designed for board to board small spacing interconnection
- Mating with 2.54mm pitch, 0.64mm square Pin Headers

PCB Surface Mount & Hole Layout

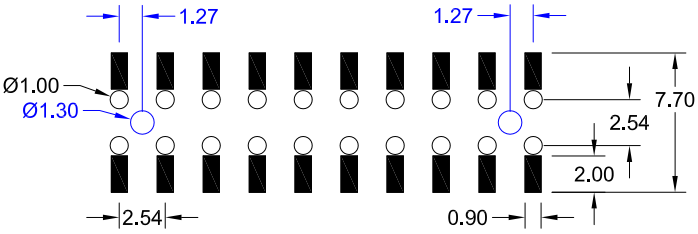

Specifications

Current rating	3 A	Operating temperature		- 40°C to +105°C
Insulation resistance	1000 MΩ min.	Processing temperature		+250°C +0/-5°C for 5sec.
Contact resistance	20 mΩ max.	Contact material	*(RoHS compliant)*	Phosphor Bronze
Withstanding voltage	500 V AC	Insulator material	*(RoHS compliant)*	PA6T UL 94 V-0

How to order

BS2 - xxx - TB365 - 55/ X

Nbr of contacts	Plating	Options
004 to **080**	**55** = Gold other platings on request	**without "locating pegs"** **A** = Tube packing; with „PickUp Cap" **B** = Reel packing; with „PickUp Cap" **with "locating pegs"** (available only from 006 to 080 contacts) **C** = Tube packing; without „PickUp Cap" **D** = Tube packing; with „PickUp Cap" **E** = Reel packing; with „PickUp Cap"

When using this female connector as a bottom entry connector, we recommend that the Pin Header pins protrude by around 2.00mm above the surface of the female connector after assembly. This will avoid any risk of separation of the Pin Header from the Female Header during shock and vibration.

2.54mm pitch Female Header

- SMT - side entry single & dual row

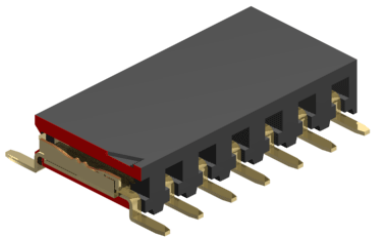

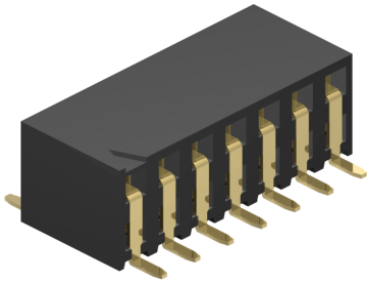

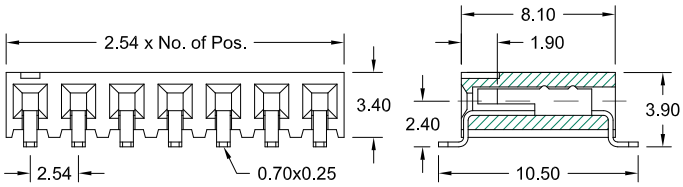

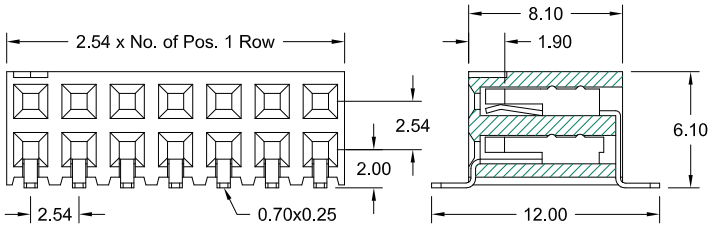

PCB Surface Mount Layout -single row-

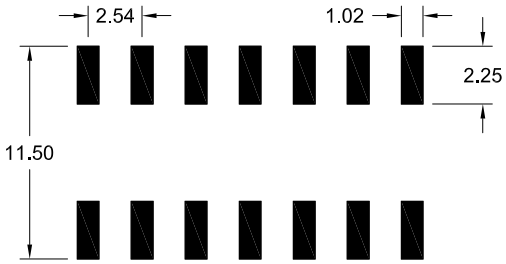

PCB Surface Mount Layout -dual row-

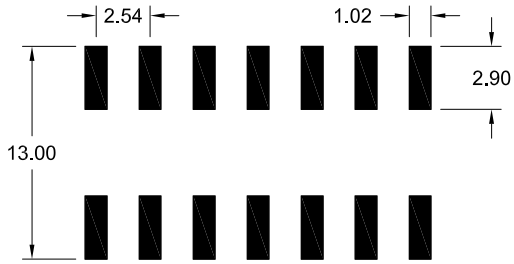

Application and Features

- ***Standard: Tube packing***
- Hi-rel dual beam contact assures reliable PC-board connections
- Accepts 0.64mm square pins
- Stand-off's facilitate post solder cleaning
- Lowest possible profile
- Automatic assembly to PCB possible

Specifications

Current rating	3 A	Operating temperature	- 40°C to +105°C
Insulation resistance	1000 MΩ min.	Processing temperature	+250°C +0/-5°C for 5sec.
Contact resistance	20 mΩ max.	Contact material *(RoHS compliant)*	Phosphor Bronze
Withstanding voltage	500 V AC	Insulator material *(RoHS compliant)*	PA6T UL 94 V-0

How to order

BS x - xxx - R390 - 55 /X

Rows	Nbr of contacts	Plating	Packing Option
1 = single row	single row = **002** to **040**	**55** = Gold	**/R** = Reel
2 = dual row	dual row = **004** to **080**	other platings on request	No suffix for Tube packing

2.54mm pitch

IDC – Female Connector

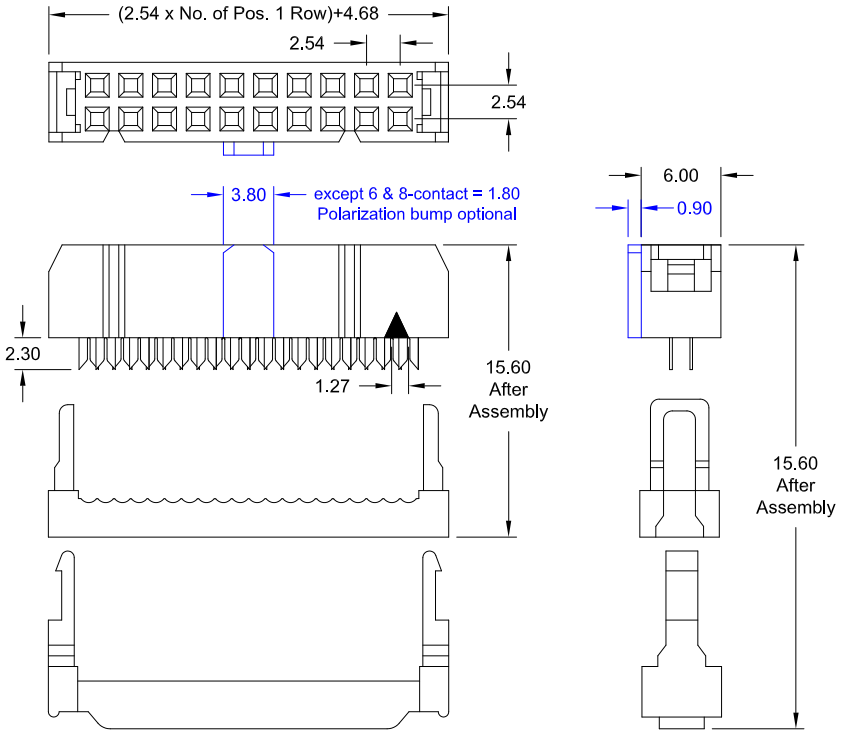

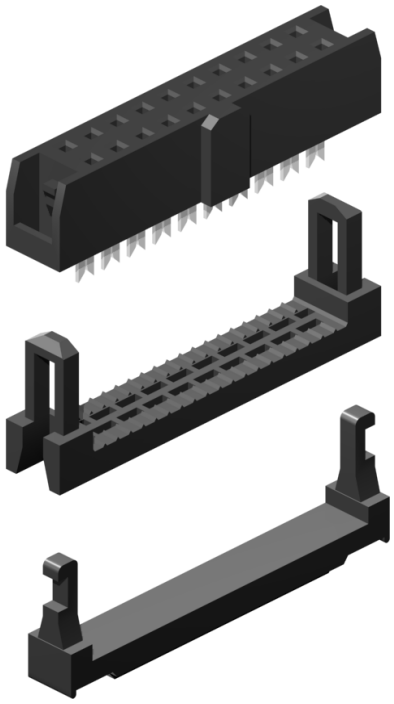

Specifications

Current rating	1 A
Insulation resistance	1000 MΩ min.
Contact resistance	30 mΩ max.
Withstanding voltage	500 V AC

Operating temperature	- 40°C to +105°C
Contact material *(RoHS compliant)*	Brass
Plating	Nickel, Gold on mating area
Insulator material *(RoHS compliant)*	PBT black UL 94 V-0 (grey colour on request)

Application and Features

Designed to mate with 0.64mm square pins Box (Shrouded) Header

High Quality contacts

Accepts 1.27mm pitch flat ribbon cable AWG 28 (0.20mm) or AWG 30 (0.17mm).

How to order

IDS - xxx - X 100 - N5 /P

Nbr of contacts
006; 008; 010; 012 014; 016; 018; 020 024; 026; 030; 034 036; 040; 050; 060 064

Strain relief		
S	=	with
W	=	without

Option
/P
if Polarization bump is requested

2.54mm pitch

- THT - DIN Header (DIN 41651)

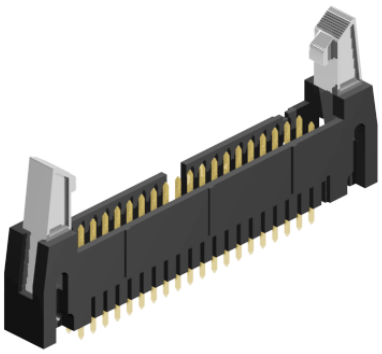

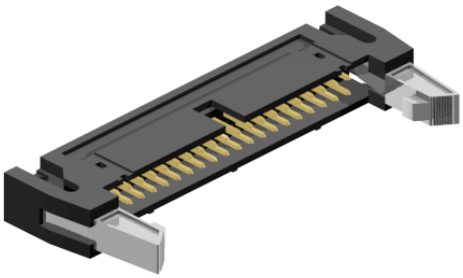

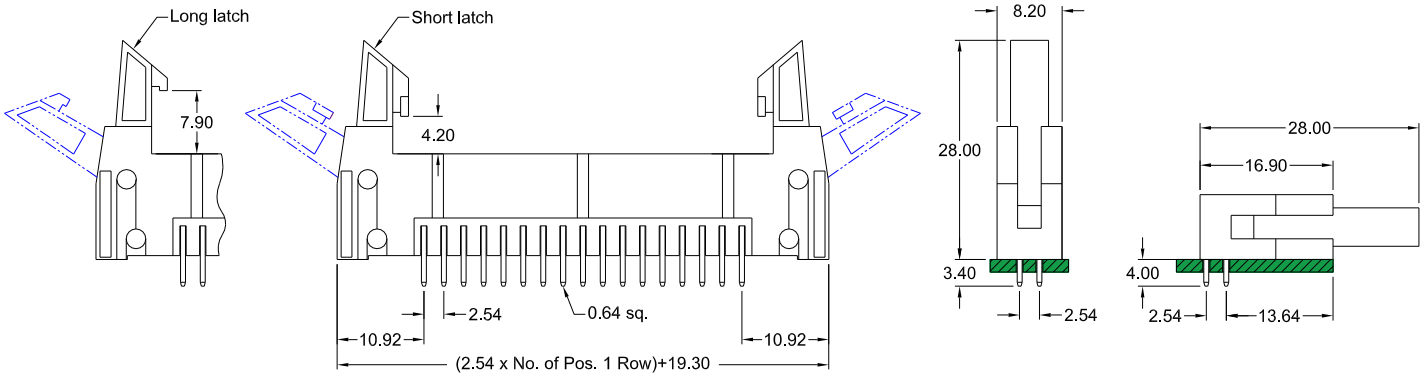

Application and Features

- Provides fast connection / disconnection of IDC connectors.
- Assures reliable flat cable to PC - board assembly.
- Optional latching features available.
- SMT & Press-Fit Type available on request.

PCB Hole Layout

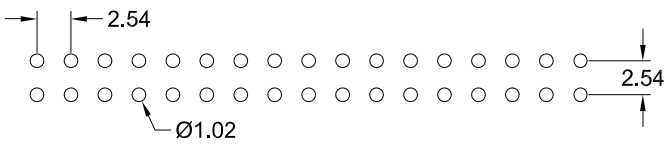

Specifications

Current rating	3 A
Insulation resistance	1000 MΩ min.
Withstanding voltage	500 V AC

Operating temperature		- 40°C to +105°C
Contact material	*(RoHS compliant)*	Brass
Insulator material	*(RoHS compliant)*	PBT UL 94 V-0 black colour

How to order

DH X - xxx - X 100 - 55

Latch type	Nbr of pins	Connector Style	Plating
S = short	**010; 012; 014; 016 020; 024; 026; 030 034; 040; 050; 060 064**	**S** = straight	**55** = Gold
L = long		**R** = right angle	
W = without		SMT Style available on request	other platings on request

2.54mm pitch

IDC Shrouded Header

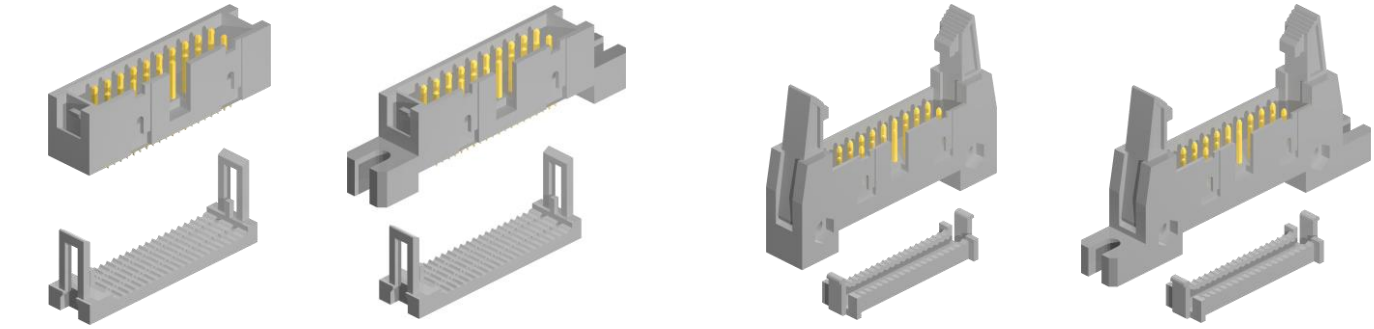

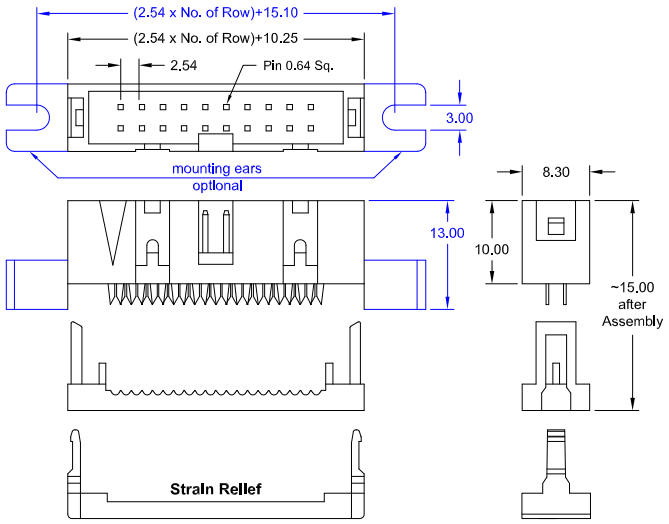

IDH Type

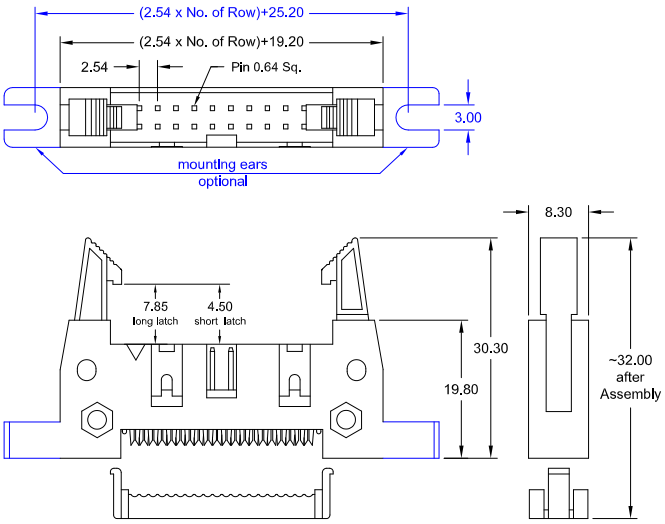

IDD Type

Specifications

Current rating	3 A		Operating temperature	- 40°C to +105°C	
Insulation resistance	1000 MΩ min.		Contact material *(RoHS compliant)*	Brass	
Withstanding voltage	1000 V AC		Insulator material *(RoHS compliant)*	PBT (grey)	UL 94 V-0

Application and Features

Designed to mate with 2.54mm IDC Female Headers. Header type is available with or without mounting ears.
DIN Header type IDD is available with long & short eject latches.
Standard Insulator colour grey, other colours on request

How to order

ID X - xxx - X 100 - N5

Types	Nbr of pins	Executions		Plating
H = Header	**010; 014; 016; 020** **024; 026; 030; 034** **040; 050; 060; 064** *available with strain relief:* **010; 014; 016; 020** **026; 034; 040**	IDH	**W** = w/o ears **WS** = w/o ears, with strain relief **E** = with ears **ES** = with ears, with strain relief	**N5** = Nickel/Gold other platings on request
D = DIN Header (DIN 41 651)	**010; 014; 016; 020** **024; 026; 030; 034** **040; 050; 060; 064**	IDD	**L** = long latch, w/o ears **LE** = long latch, with ears **S** = short latch, w/o ears **SE** = short latch, with ears	

Mini – Jumpers

1.27mm, 2.00mm, 2.54mm & 5.08mm

RoHS compliant

E-tec Interconnect

1.27mm & 2.00 mm Mini - Jumpers

JPC – type - top closed -

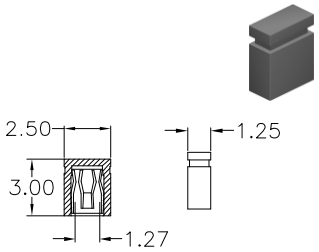

Order Code: JPC – 127 – BL – 55

JPE – type - top open -

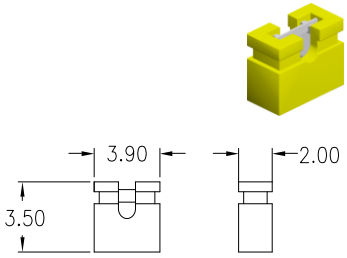

Order Code: JPE – 200 – BL – 55
Other colours: **RD, BU, YL**

JPC – type - top closed -

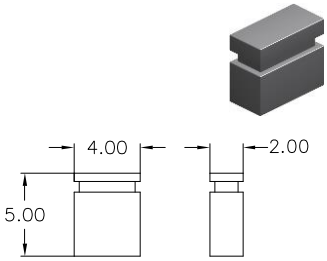

Order Code: JPC – 200 – BL – 55

JPH – type - with handle -

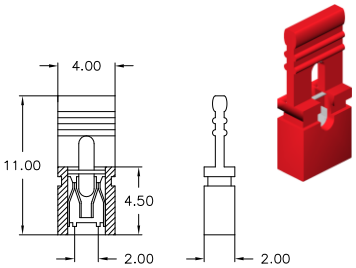

Order Code: JPH – 200 – BL – 55
Other colours: **RD, BU, YL & WH**

2.54 mm & 5.08 mm Mini - Jumpers

JPE – type
top open - commercial type -

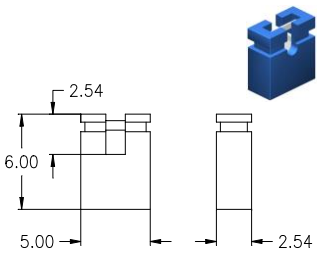

Order Code: JPE – 254 – BL – 55
Other colours: **GR, RD, BU, YL & WH**

JPC – type
top closed

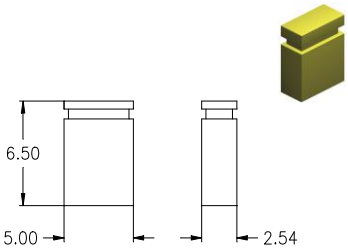

Order Code: JPC – 254 – BL – 55
Other colours: **GR, RD, BU, YL & WH**

JPH – type
with handle

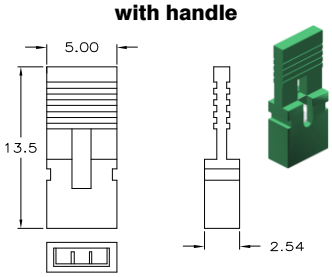

Order Code: JPH – 254 – BL – 55
Other colours: **GR, RD, BU, YL & WH**

JPC – type
top closed

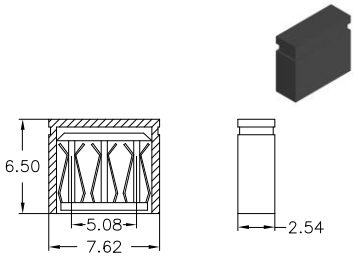

Order Code: JPC – 508 – BL – 55

2.00 mm Multi - Jumper

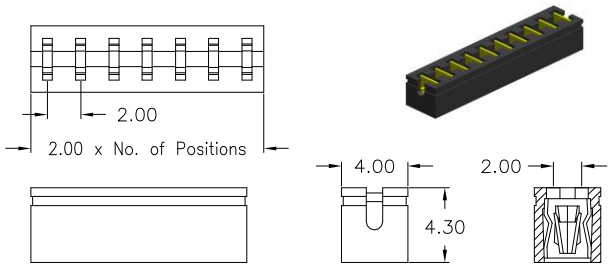

Order Code: JPM – xx – 200 – BL – 55
No. of Jumper : **02** to **11**

2.54 mm Multi - Jumper

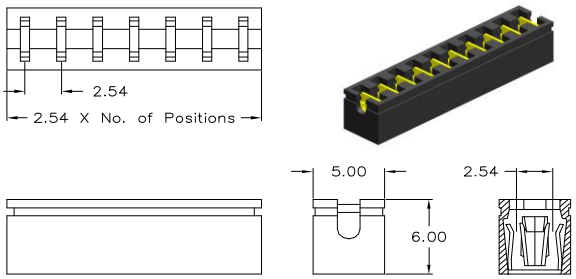

Order Code: JPM – xx – 254 – BL – 55
No. of Jumper : **02** to **10**

Non Insulated Wire Shorting Links

JPW – type
254

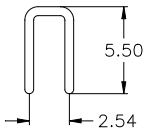

Order Code
JPW – 254 – 55

JPW – type
508

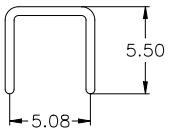

Order Code
JPW – 508 – 55

JPW – type
762

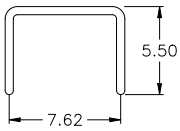

Order Code:
JPW – 762 – 55

JPW – type
102

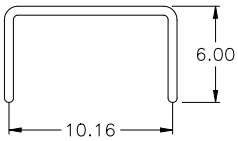

Order Code:
JPW – 102 – 55

Specifications

Max. current rating
- 1.27 & 2.00mm pitch : 1 A
- 2.54 & 5.08mm pitch : 3 A

Insulation resistance	1000 MΩ min.
Contact resistance	20 mΩ max.
Withstanding voltage	500 V AC
Operating temperature	- 40°C to +105°C

Contact material	all pitch 2.54mm: Brass all others and **JPM:** PhBz **JPW:** Brass; Ø 0.51 +0.25/-0.00
Plating	Jumper & Wire Shorting Links Au plated
Insulator material	pitch 1.27mm & **JPH**: PA66 UL 94 V-2 all others: PBT UL 94 V-0
Colour attributes	**BL** = black *for Jumpers Standard* **RD** = red **BU** = blue **GR** = green **WH** = white **YL** = yellow *other colours on request*

IDC – DIP Plug 2.00mm x 2.00mm

IDC pitch 1.00mm

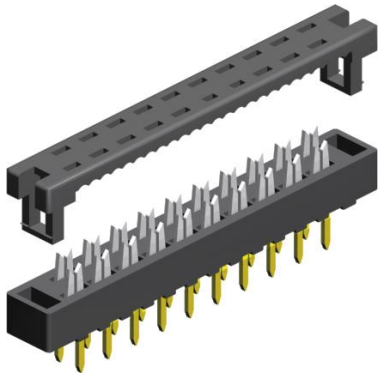

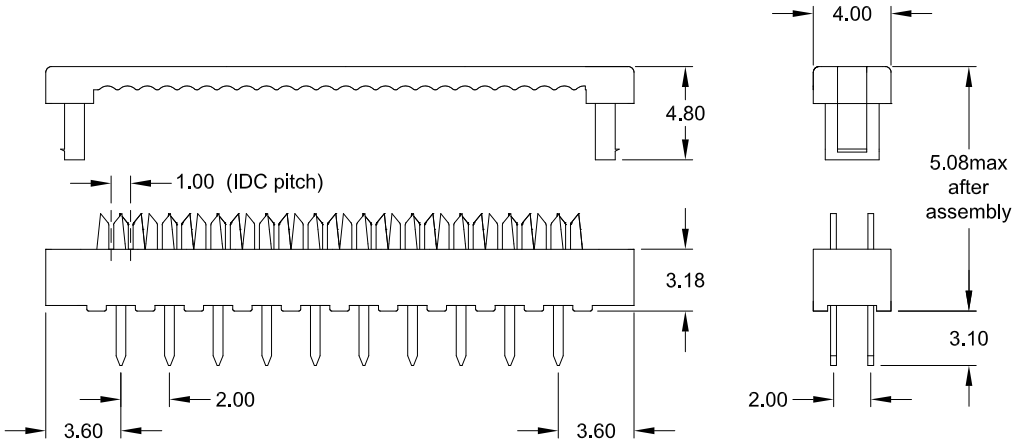

Application and Features

- A perfect solution for attaching a 1.00mm pitch flat ribbon cable to a PC-board
- Low-profile, only 5.08mm with cable
- Designed for direct soldering to a PC-board or plugging into DIP Socket

PCB Hole Layout

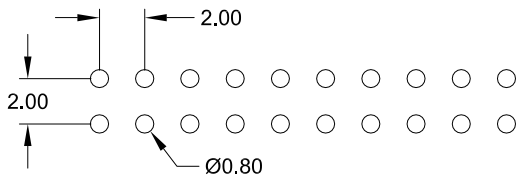

Specifications

Current rating	1 A
Insulation resistance	1000 MΩ min.
Contact resistance	30 mΩ max.
Withstanding voltage	500 V AC

Operating temperature	- 40°C to +105°C
Contact material *(RoHS compliant)*	Phosphor Bronze
Insulator material *(RoHS compliant)*	PBT UL 94 V-0

How to order

IDP - xxx - S200 - N5

Nbr of contacts
006; 008; 010; 012 **014; 016; 018; 020** **022; 024; 026; 028** **030; 034; 040; 044** **050; 060; 068**

Plating
N5 Ni on IDC area / Au on solder tail

IDC – DIP Plugs 2.54mm
IDC pitch 1.27mm

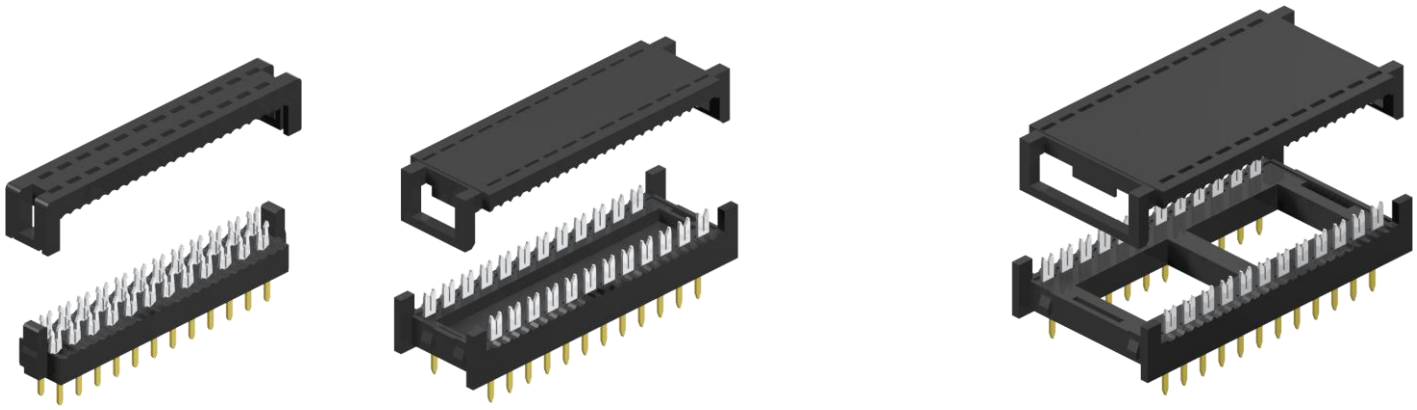

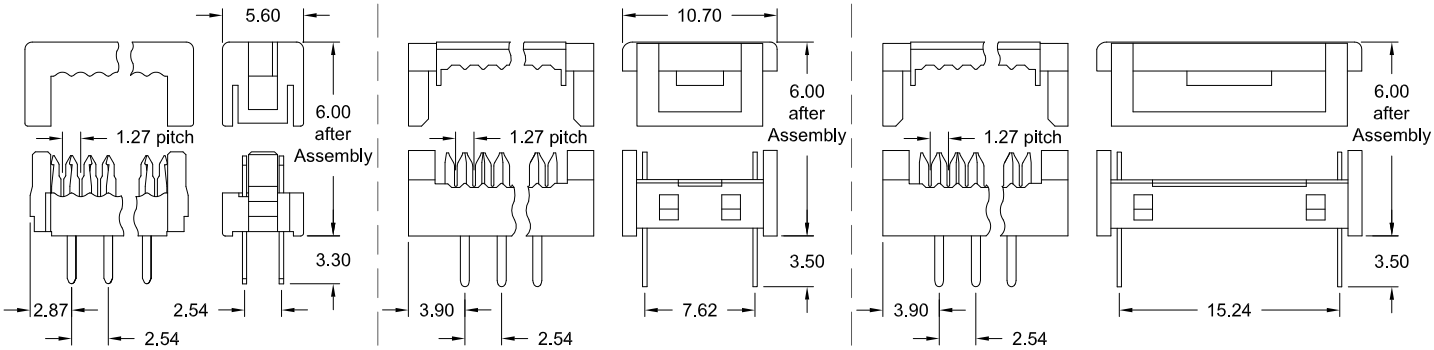

Style **S100** **S300** **S600**

APPLICATION AND FEATURES

- A perfect solution for attaching a 1.27mm pitch flat ribbon cable to a PC-board
- Low-profile, only 6.00mm height with cable
- Designed for direct soldering to a PC-Board or plugging into DIP Socket

PCB Hole Layout

S100

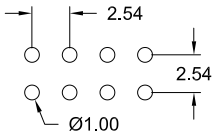

S300

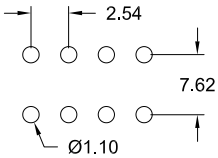

S600

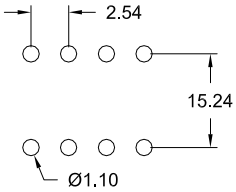

SPECIFICATIONS

Current rating	1 A
Insulator resistance	1000 MΩ min.
Contact resistance	30 mΩ max.
Withstanding voltage	500 V AC
Operating temperature	- 40°C to +105°C
Contact material *(RoHS compliant)*	Cpper Alloy
Insulator material *(RoHS compliant)*	PBT UL 94 V-0

How to order

IDP - xxx - Sxxx - N5

Nbr of contacts		
S100 Style	**S300** Style	**S600** Style
006; 008; 010 **012; 014; 016** **020; 024; 026** **030; 034; 040** **050; 060; 064**	**008; 010; 014** **016; 018; 020** **024; 028; 040**	**024; 028; 032** **036; 040**

DIP Plug Style	
Code	Pitch (mm)
S100	2.54
S300	7.62
S600	15.24

Plating
N5 Ni on IDC pierce area Au on solder tail

IDC Transition Connector - THT -

IDC pitch 1.27mm

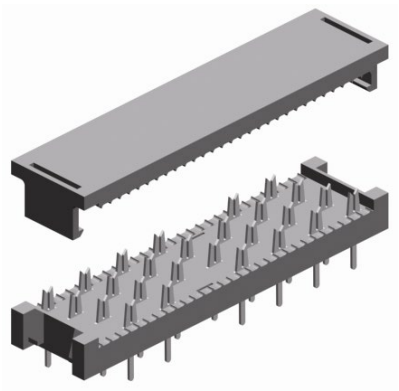

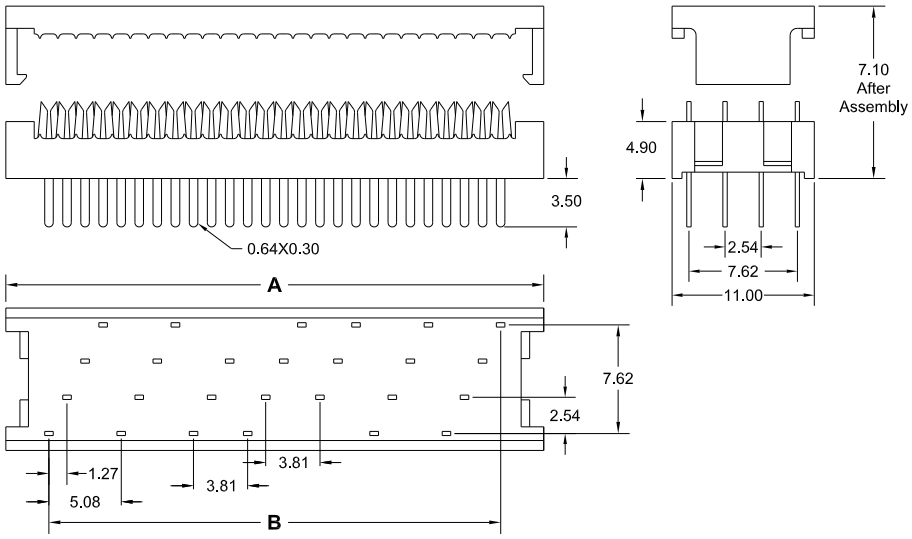

Dimensions

DIM	10 pos.	16 pos.	20 pos.	26 pos.	34 pos.	40 pos.
A	18.17 mm	25.79 mm	30.87 mm	38.49 mm	48.65 mm	56.27 mm
B	11.43 mm	19.05 mm	24.13 mm	31.75 mm	41.91 mm	49.53 mm

PCB Hole Layouts

10 pos.

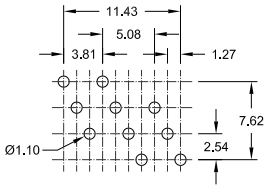

16, 20, & 40 pos.

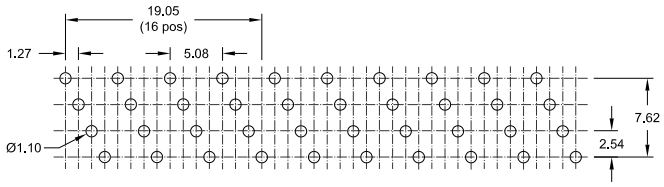

26 pos.

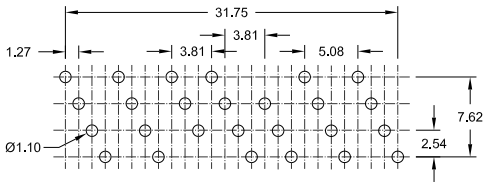

34 pos.

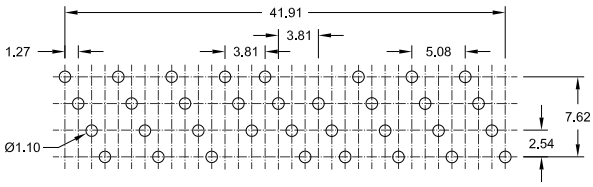

Application and Features

Designed for 1.27mm (.050“) centre flat ribbon cable.
Low profile with only 7.10mm above board after assembly.
Designed for direct soldering to PCB.

Specifications

Current rating	1 A
Insulation resistance	1000 MΩ min.
Contact resistance	30 mΩ max.
Withstanding voltage	500 V AC

Operating temperature	- 40°C to +105°C
Contact material *(RoHS compliant)*	Phosphor Bronze
Insulator material *(RoHS compliant)*	PBT UL 94 V-0

How to order

IDP - xxx - T050 - 99

Nbr of contacts
010; **016**; **020**; **026** **034**; **040**

Plating
99 = Tin *(leadfree)*
other platings on request

PCI Card Edge Connector - THT - 1.27mm pitch

RoHS compliant

E-tec Interconnect

120 pin

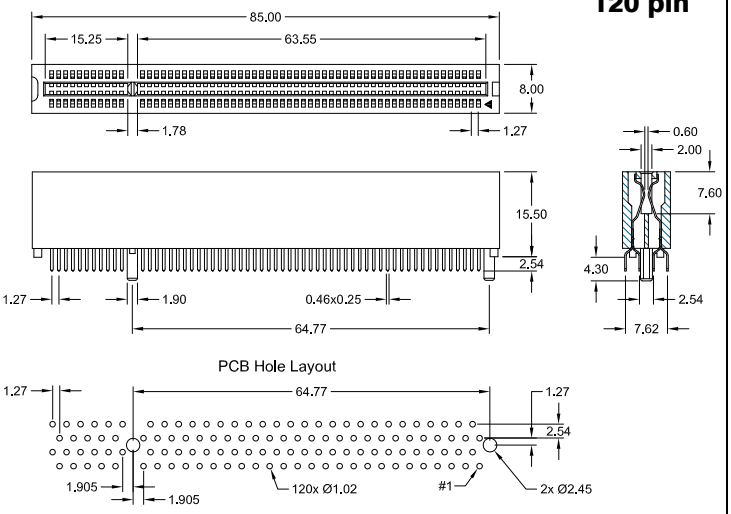

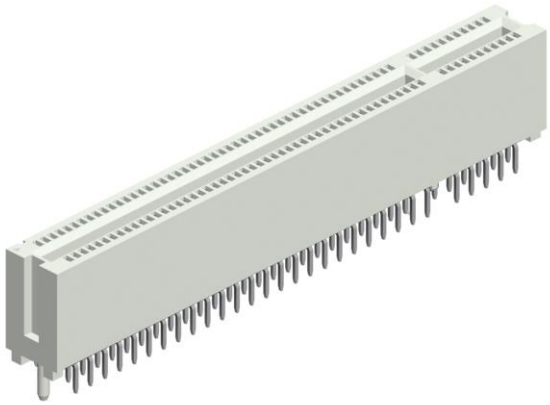

PCI 32bit Order Code: **ECC-120-P050- 95**

184 pin

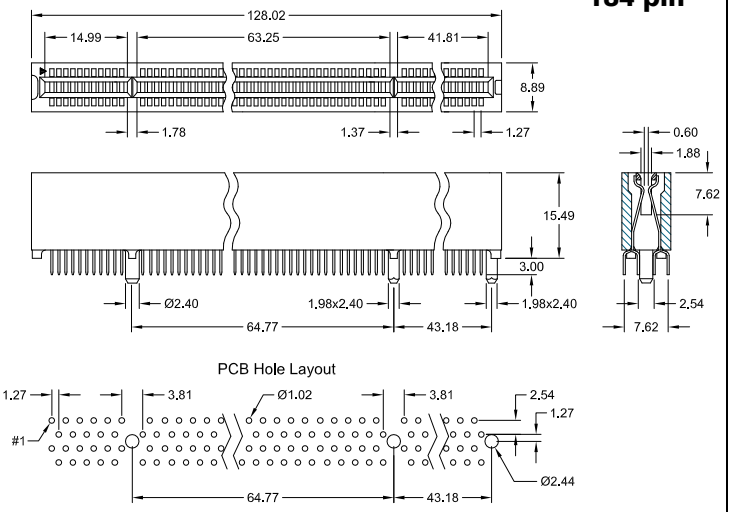

PCI 64bit 3.3V Order Code: **ECC-184-P053-95**

184 pin

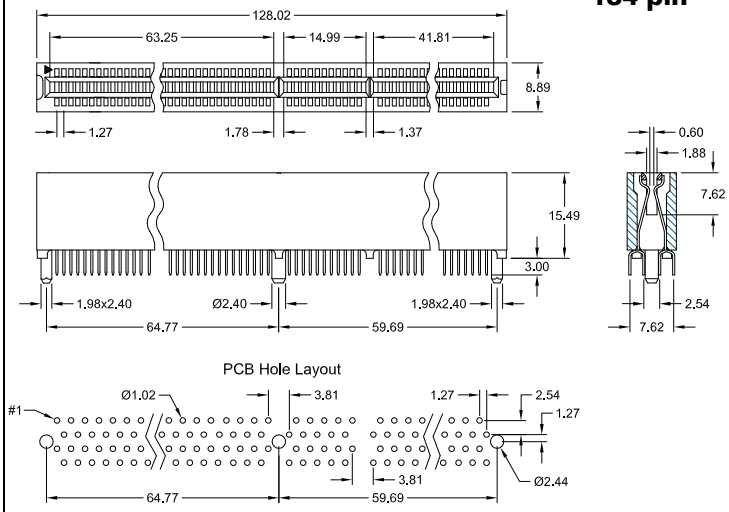

PCI 64bit 5V Order Code: **ECC-184-P055-95**

Application and Features

- Hi-rel dual beam contact assures reliable PC Board connections.
- Accepts PCB thickness of 1.57mm ±0.18
- 1.27mm contact center pitch.

Recommended Mating Board Dimensions

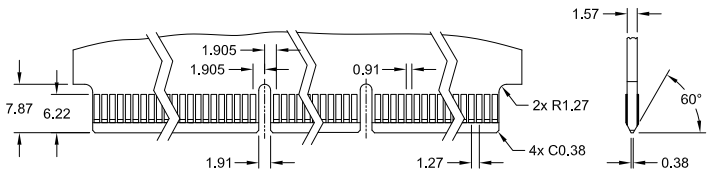

Specifications

Current rating	1 A
Insulation resistance	1000 MΩ min.
Contact resistance	30 mΩ max.
Withstanding voltage	500 V AC rms. 60Hz for 1 Minute
Capacitance	2pF max.
Voltage rating	250 V AC rms.
Operating temperature	- 55°C to +105°C

Contact material	Copper alloy *(RoHS compliant)*
Plating	Contact area Au over Ni Soldertail area Sn over Ni *(tin leadfree)*
Insulator material	PA66 (white) UL 94 V-0 *(RoHS compliant)*
Insertion force	2.26N max. per contact pair
Withdrawal force	0.15N min. per contact pair

Card Edge Connector - THT -
1.27mm pitch

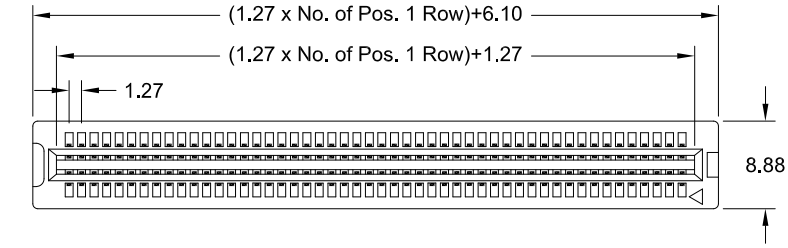

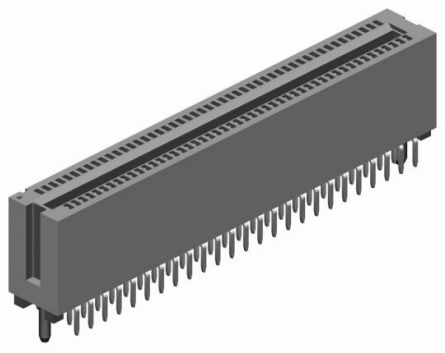

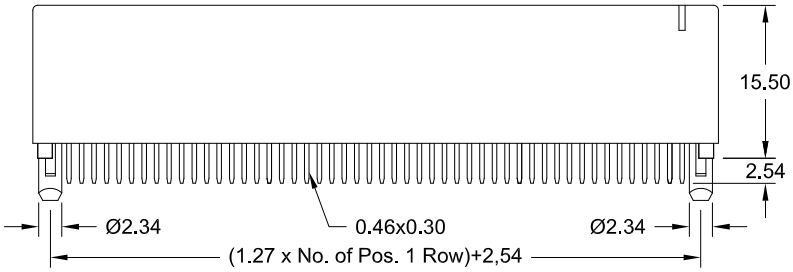

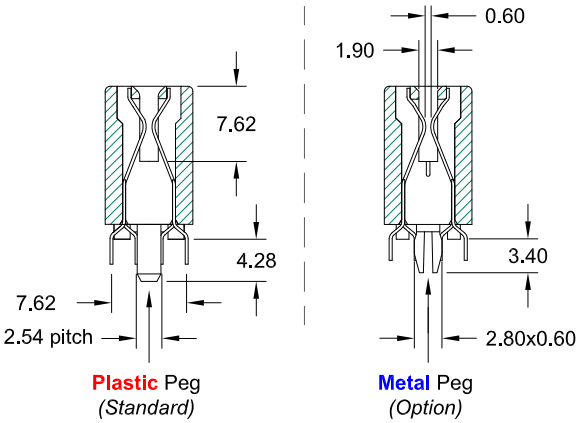

Application and Features

- Hi-rel dual beam contact assures reliable PC Board connections.
- Accepts PCB thickness of 1.57mm ±0.18
- 1.27mm contact center pitch.

PCB Hole Layout

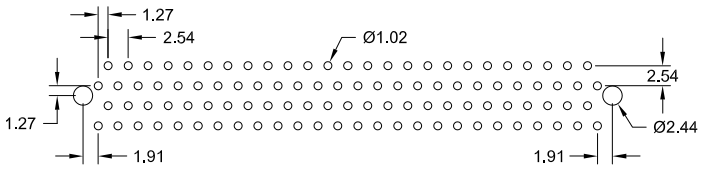

Specifications

Current rating	1 A
Insulation resistance	1000 MΩ min.
Contact resistance	30 mΩ max.
Withstanding voltage	500 V AC
Capacitance	2pF max.
Voltage rating	250 V

Operating temperature	- 55°C to +85°C
Contact material	Copper alloy *(RoHS compliant)*
Plating	Contact area – Au over Ni Soldertail area – Sn over Ni *(tin leadfree)*
Insulator material	PA66 (black) UL 94 V-0 *(RoHS compliant)*
Insertion force	2.26N max. per contact pair
Withdrawal force	0.15N min. per contact pair

How to order

ECC - xxx - S050 - 95 /X

Nbr of contacts	Plating	Peg Option
004; 006; 008; 010; 012; 014; 016; 018; 020 022; 024; 026; 028; 030 032; 034; 036; 038; 040; 042;044 046; 048; 050; 052; 054; 056 (058 only /N Type) 060; 080; 128 other contacts on request	**95** = Tin/Gold *(tin leadfree)* other platings on request	**/N** = Metal Peg plastic peg is standard; no Option suffix

Card Edge Connector - THT -
2.54mm pitch "X" Contact Style

RoHS compliant

E-tec Interconnect

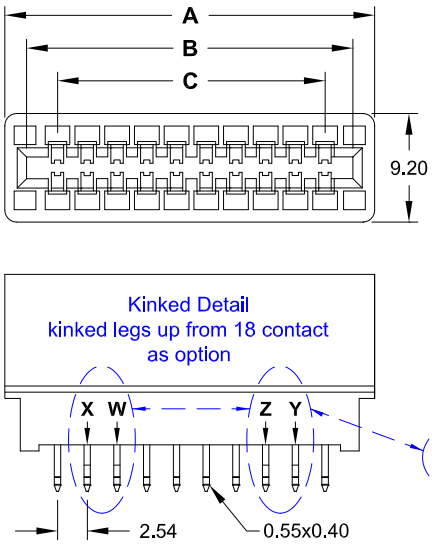

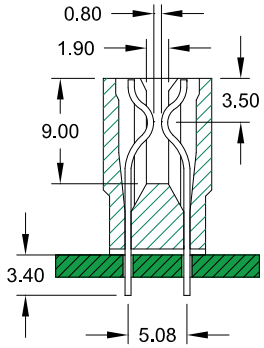

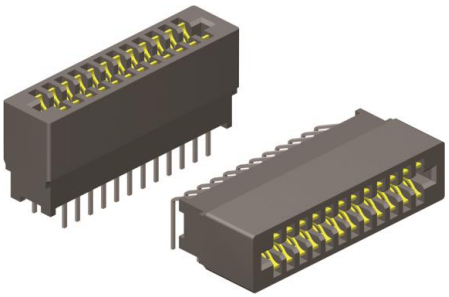

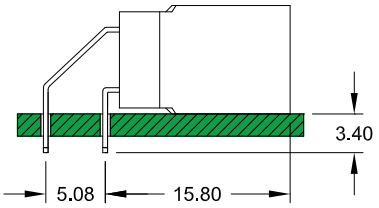

Application and Features

Hi-rel dual beam contact assures reliable PC-board connection.

Accepts PC Board thickness of 1.37mm to 1.78mm.

Straight type up from 18 contacts can be delivered with some kinked legs.
Pls. order separate datasheet for more options.

Connectors with mounting ears or solder eyes are also available.
Please contact your nearest sales office for more details.

"X" Contact Style

PCB Hole Layout

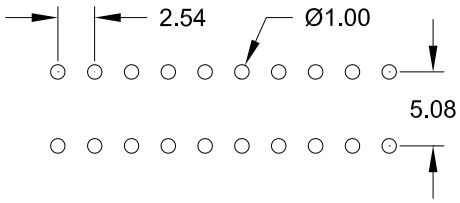

Important:
The PCB Layout is not identical for all pin count's.
Individual datasheets are available on request.

Specifications

Current rating	3 A
Insulation resistance	5000 MΩ min.
Contact resistance	20 mΩ max.
Withstanding voltage	1000 V AC

Operating temperature	- 55°C to +85°C
Contact material *(RoHS compliant)*	Brass
Insulator material *(RoHS compliant)*	PBT UL 94 V-0
Insertion force	3.33N max. / pair
Withdrawal force	0.27N min. / pair

Dimensions

"S" Style kinked Option	No. of Contacts	DIM "A" mm	DIM "B" mm	DIM "C" mm	"S" Style kinked Option	No. of Contacts	DIM "A" mm	DIM "B" mm	DIM "C" mm	"S" Style kinked Option	No. of Contacts	DIM "A" mm	DIM "B" mm	DIM "C" mm
---	**006**	14.22	10.16	5.08	XY	**028**	42.16	38.10	33.02	XY	**050**	70.10	66.04	60.96
---	**008**	16.76	12.70	7.62	XY	**030**	44.70	40.64	35.56	XY	**052**	72.64	68.58	63.50
---	**010**	19.30	15.24	10.16	XY	**032**	47.24	43.18	38.10	XY	**054**	75.18	71.12	66.04
---	**012**	21.84	17.78	12.70	XY	**034**	49.78	45.72	40.64	XY	**056**	77.72	73.66	68.58
---	**014**	24.38	20.32	15.24	WXYZ	**036**	52.32	48.26	43.18	XY	**058**	80.26	76,20	71.12
---	**016**	26.92	22.86	17.78	XY	**038**	54.86	50.80	45.72	XY	**060**	82.80	78.74	73.66
XY	**018**	29.46	25.40	20.32	XY	**040**	57.40	53.34	48.26	WXYZ	**062**	85.34	81.28	76.20
XY	**020**	32.00	27.94	22.86	XY	**042**	59.94	55.88	50.80	WXYZ	**064**	87.88	83.82	78.74
XY	**022**	34.54	30.48	25.40	XY	**044**	62.48	58.42	53.34	WXYZ	**068**	92.96	88.90	83.82
XY	**024**	37.08	33.02	27.94	XY	**046**	65.02	60.96	55.88	WXYZ	**070**	95.50	91.44	86.36
WXYZ	**026**	39.62	35.56	30.48	XY	**048**	67.56	63.50	58.42	WXYZ	**072**	98.04	93.98	88.90

How to order

ECC - xxx /X - X 100 - 95

Nbr of contacts	Option	Connector Style	Plating
see above table	**/K** = *if with kinked legs* kinked legs for straight, **S100** Style up from 18 contact possible	**S** = straight *(with kinked legs possible)* **R** = right angle *(no kinked legs possible)* **Attention high MOQ's** Refer to Connector Style SC100 and RC100 on page 89a for a close equivalent	**95** = Tin/Gold *(tin leadfree)* other platings on request

Card Edge Connector - THT -

2.54mm pitch "M" Contact Style

RoHS compliant

E-tec Interconnect

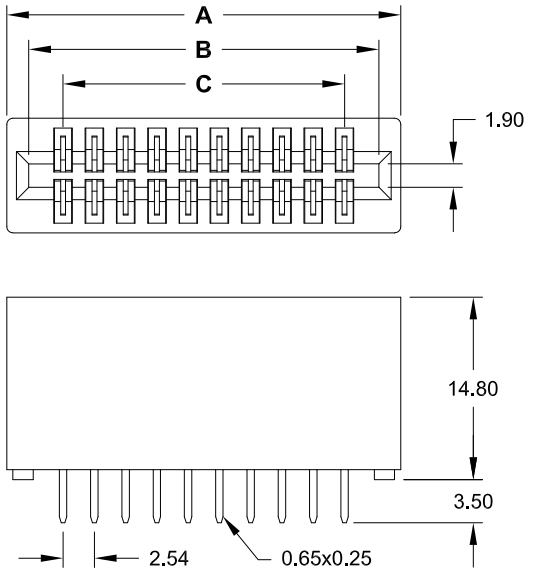

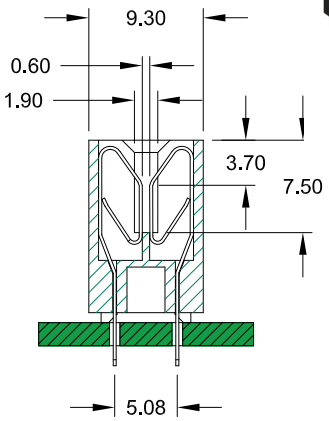

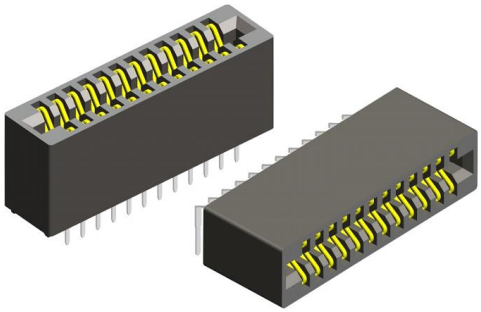

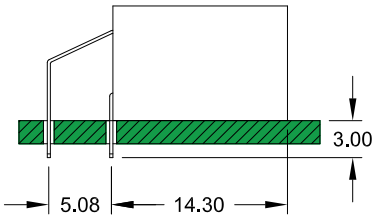

Application and Features

Hi-rel dual beam contact assures reliable PC-board connection.

Accepts PC Board thickness of 1.20mm to 1.60mm.

Connectors with mounting ears or solder eyes are also available.

Please contact your nearest sales office for more details.

"M" Contact Style

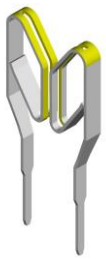

PCB Hole Layout

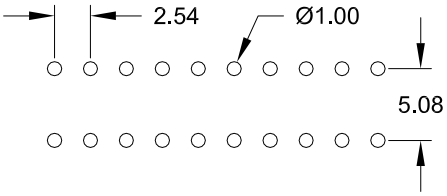

Important:

The PCB Layout is not identical for all pin count's.
Individual datasheets are available on request.

Specifications

Current rating	3 A
Insulation resistance	1000 MΩ min.
Contact resistance	20 mΩ max.
Withstanding voltage	1000 V AC

Operating temperature		- 55°C to +85°C
Contact material	*(RoHS compliant)*	Brass
Insulator material	*(RoHS compliant)*	PBT UL 94 V-0
Insertion force		3.33N max. / pair
Withdrawal force		0.27N min. / pair

Dimensions

Style	No. of Contacts	DIM "A" mm	DIM "B" mm	DIM "C" mm	Style	No. of Contacts	DIM "A" mm	DIM "B" mm	DIM "C" mm	Style	No. of Contacts	DIM "A" mm	DIM "B" mm	DIM "C" mm
S & R	**006**	14.22	10.66	5.08	S & R	**030**	44.70	41.14	35.56	S & R	**054**	75.18	71.62	66.04
S & R	**008**	16.76	13.20	7.62	S & R	**032**	47.24	43.68	38.10	S & R	**056**	77.72	74.16	68.58
S & R	**010**	19.30	15.74	10.16	S & R	**034**	49.78	46.22	40.64	S & R	**058**	80.26	76,70	71.12
S & R	**012**	21.84	18.28	12.70	S & R	**036**	52.32	48.76	43.18	S & R	**060**	82.80	79.24	73.66
S & R	**014**	24.38	20.82	15.24	S & R	**038**	54.86	51.30	45.72	S & R	**062**	85.34	81.78	76.20
S & R	**016**	26.92	23.36	17.78	S & R	**040**	57.40	53.84	48.26	S & R	**064**	87.88	84.32	78.74
S & R	**018**	29.46	25.90	20.32	S & R	**042**	59.94	56.38	50.80	S & R	**066**	90.42	86.86	81.28
S & R	**020**	32.00	28.44	22.86	S & R	**044**	62.48	58.92	53.34	S & R	**068**	92.96	89.40	83.82
S & R	**022**	34.54	30.98	25.40	S & R	**046**	65.02	61.46	55.88	S & R	**070**	95.50	91.94	86.36
S & R	**024**	37.08	33.52	27.94	S & R	**048**	67.56	64.00	58.42	S & R	**072**	98.04	94.48	88.90
S & R	**026**	39.62	36.06	30.48	S & R	**050**	70.10	66.54	60.96					
S & R	**028**	42.16	38.60	33.02	S & R	**052**	72.64	69.08	63.50					

How to order

ECC - xxx - XC100 - 95

Nbr of contacts	Connector Style	Plating
see above table	**SC100** = straight **RC100** = right angle	**95** = Tin/Gold *(tin leadfree)* other platings on request

IDC – Card Edge Connector

2.54mm pitch

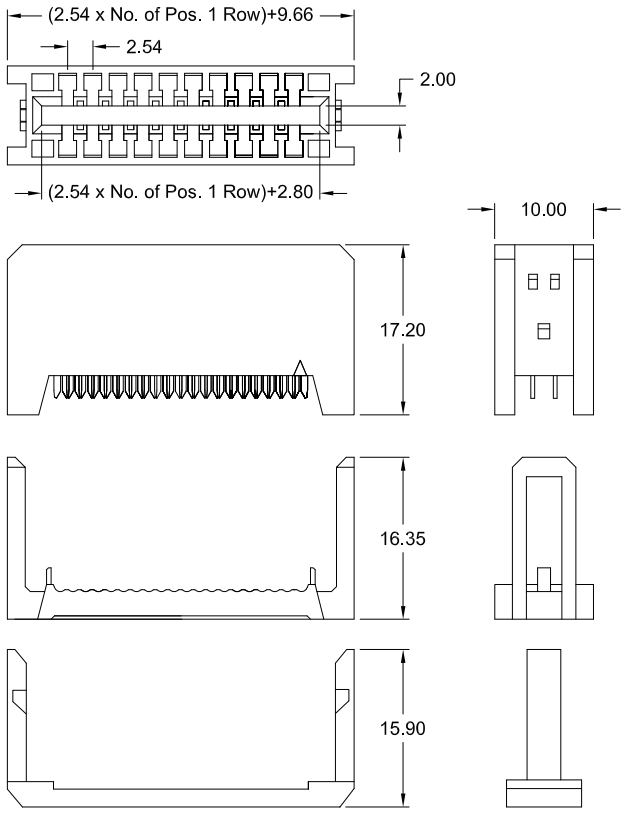

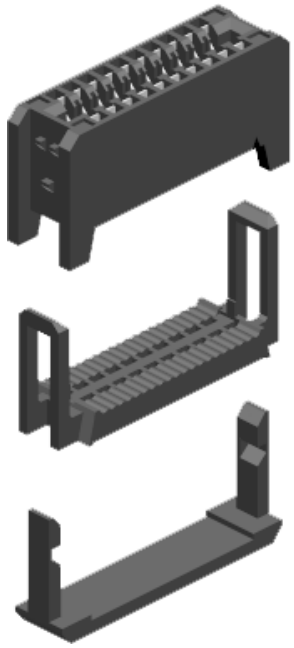

Specifications

Current rating	1 A
Insulation resistance	1000 MΩ min.
Contact resistance	20 mΩ max.
Withstanding voltage	500 V AC
Operating temperature	- 40°C to +105°C
Contact material *(RoHS compliant)*	Brass
Insulator material *(RoHS compliant)*	PBT UL 94 V-0

Application and Features

- Hi-rel dual beam contact for reliable PCB connections.
- Accepts PCB thickness of 1.37 to 1.78mm.
- Insulation displacement termination for 1.27mm flat cable AWG #28 or AWG #30 solid.

Recommended PCB dimensions

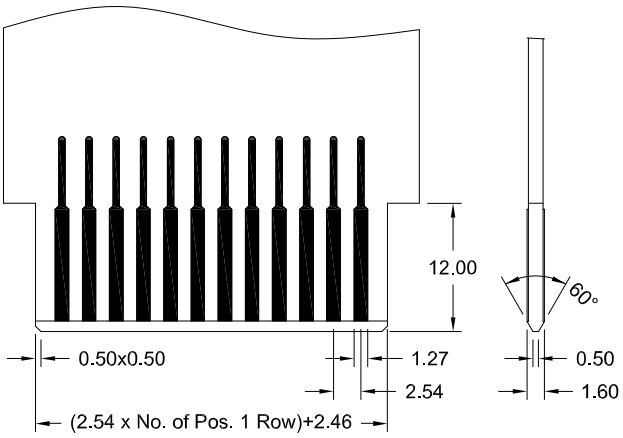

How to order

IDC - xxx - X 100 - N5

Nbr of contacts	Strain relief	Plating
010; **014**; **016** **020**; **026**; **034** **040**; **050**	**S** = with **W** = without	**N5** Nickel in IDC & Gold in contact area other platings on request

FPC/FFC Connector ZIF Type
- SMT - 0.50mm pitch vertical

RoHS compliant

E-tec Interconnect

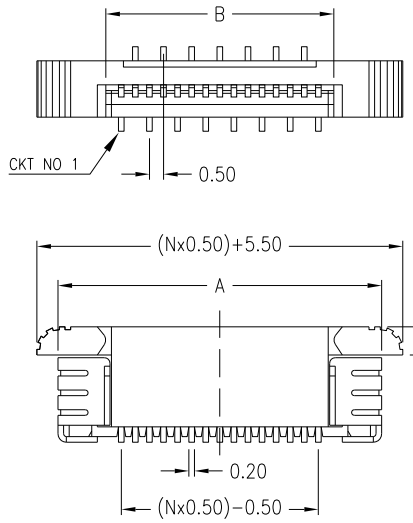

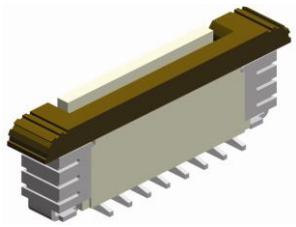

Standard:
Connector with PickUp Cap and Reel packing

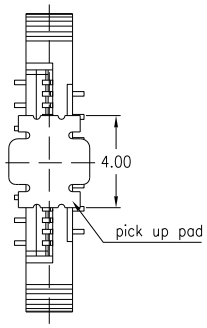

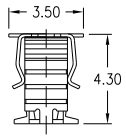

Please ask your sales office for details on Reel dimension.

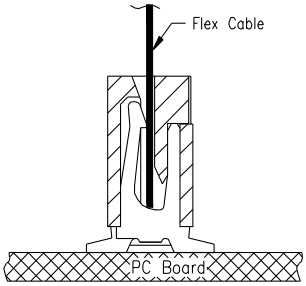

PCB Surface Mount Layout

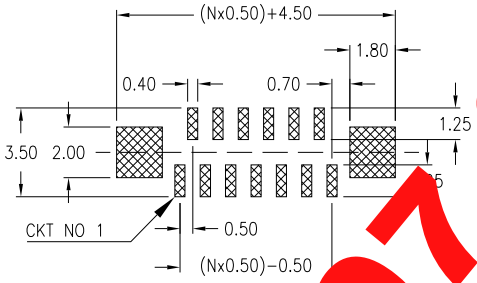

Recommended FPC/FFC dimensions

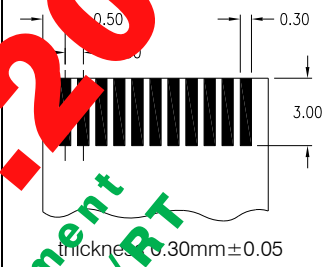

SPECIFICATIONS

Current rating	0.4 A max.	Operating temperature	- 55°C to +85°C
Insulator resistance	50 MΩ min.	Processing temperature	+250°C +0/-5°C for 3sec.
Contact resistance	30 mΩ max.	Contact material *(RoHS compliant)*	Phosphor Bronze
Withstanding voltage	250 V AC/1 Min.	Contact plating	Tin *(leadfree)*
		Insulator material *(RoHS compliant)*	Nylon UL 94 V-0

Dimensions (mm)

Contacts	DIM "A"	DIM "B"	Contacts	DIM "A"	DIM "B"	Contacts	DIM "A"	DIM "B"	Contacts	DIM "A"	DIM "B"
004	6.00	2.60	**016**	12.00	8.60	**028**	18.00	14.60	**040**	24.00	20.60
005	6.50	3.10	**017**	12.50	9.10	**029**	18.50	15.10	**041**	24.50	21.10
006	7.00	3.60	**018**	13.00	9.60	**030**	19.00	15.60	**042**	25.00	21.60
007	7.50	4.10	**019**	13.50	10.10	**031**	19.50	16.10	**043**	25.50	22.10
008	8.00	4.60	**020**	14.00	10.60	**032**	20.00	16.60	**044**	26.00	22.60
009	8.50	[illegible]	**021**	14.50	11.10	**033**	20.50	17.10	**045**	26.50	23.10
010	9.00	5.60	**022**	15.00	11.60	**034**	21.00	17.60	**046**	27.00	23.60
011	9.50	[illegible]	**023**	15.50	12.10	**035**	21.50	18.10	**047**	27.50	24.10
012	10.00	[illegible]	**024**	16.00	12.60	**036**	22.00	18.60	**048**	28.00	24.60
013	10.50	[illegible]	**025**	16.50	13.10	**037**	22.50	19.10	**049**	28.50	25.10
014	[illegible]	7.60	**026**	17.00	13.60	**038**	23.00	19.60	**050**	29.00	25.60
015	[illegible]	8.10	**027**	17.50	14.10	**039**	23.50	20.10			

EOL 31.07.2018
Recommended Replacement
FCZ-xxxVC50(VC51)-99/RT
See Page 91

How to order

FCZ - xxx - V 050 - 99 /RP

Nbr of contacts	Plating	Packing
004 to **050**	**99** = tin *(leadfree)*	**RP** connector with "PickUp Cap" and Reel packing. (Reel packing qty. on request)

FPC/FFC Connector **ZIF** Type

- SMT - 0.50mm pitch vertical

RoHS compliant

E-tec Interconnect

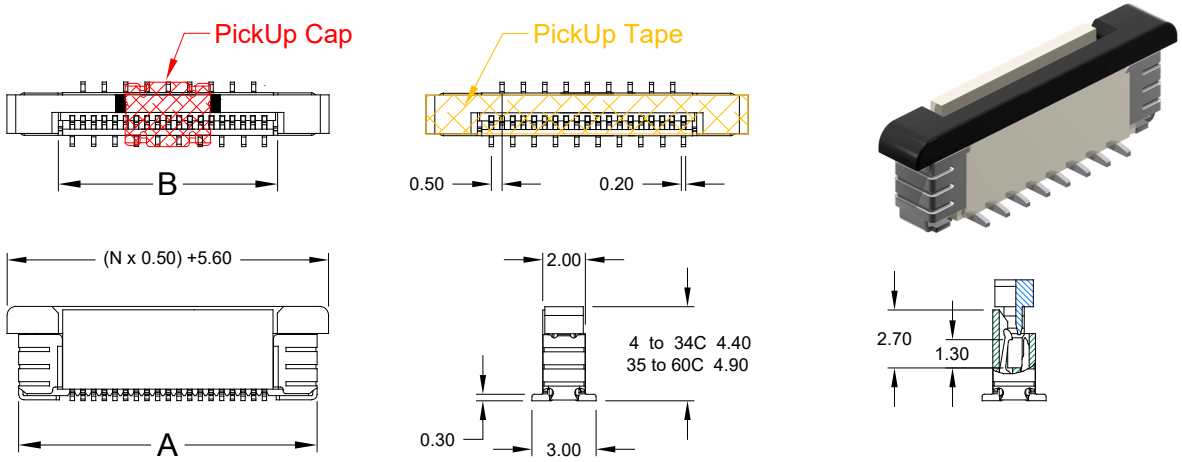

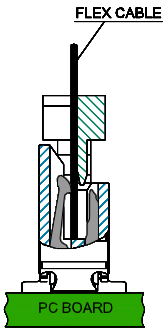

PCB Surface Mount Layout

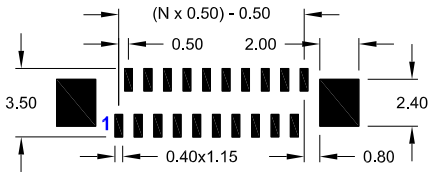

Foot Style **VC50**

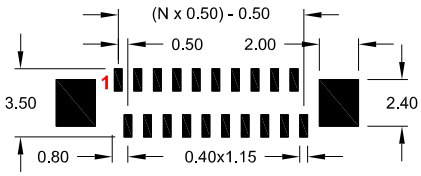

Foot Style **VC51**

Recommended FPC/FFC dimensions

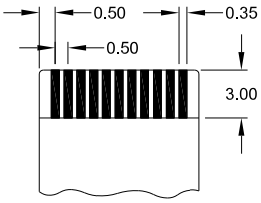

thickness 0.30mm±0.05

SPECIFICATIONS

Current rating	0.5 A max.	Operating temperature	- 20°C to +85°C
Insulation resistance	500 MΩ min.	Processing temperature	+250°C +0/-5°C for 3sec.
Contact resistance	40 mΩ max.	Contact material *(RoHS compliant)*	Phosphor Bronze
Withstanding voltage	200 V AC	Contact plating	Tin *(leadfree)*
		Insulator material *(RoHS compliant)*	LCP UL 94 V-0

Dimensions (mm)

Contacts	DIM "A"	DIM "B"	Contacts	DIM "A"	DIM "B"	Contacts	DIM "A"	DIM "B"	Contacts	DIM "A"	DIM "B"
004	6.50	2.60	**019**	14.00	10.10	**034**	21.50	17.60	**049**	29.00	25.10
005	7.00	3.10	**020**	14.50	10.60	**035**	22.00	18.10	**050**	29.50	25.60
006	7.50	3.60	**021**	15.00	11.10	**036**	22.50	18.60	**051**	30.00	26.10
007	8.00	4.10	**022**	15.50	11.60	**037**	23.00	19.10	**052**	30.50	26.60
008	8.50	4.60	**023**	16.00	12.10	**038**	23.50	19.60	**053**	31.00	27.10
009	9.00	5.10	**024**	16.50	12.60	**039**	24.00	20.10	**054**	31.50	27.60
010	9.50	5.60	**025**	17.00	13.10	**040**	24.50	20.60	**055**	32.00	28.10
011	10.00	6.10	**026**	17.50	13.60	**041**	25.00	21.10	**056**	32.50	28.60
012	10.50	6.60	**027**	18.00	14.10	**042**	25.50	21.60	**057**	33.00	29.10
013	11.00	7.10	**028**	18.50	14.60	**043**	26.00	22.10	**058**	33.50	29.60
014	11.50	7.60	**029**	19.00	15.10	**044**	26.50	22.60	**059**	34.00	30.10
015	12.00	8.10	**030**	19.50	15.60	**045**	27.00	23.10	**060**	34.50	30.60
016	12.50	8.60	**031**	20.00	16.10	**046**	27.50	23.60			
017	13.00	9.10	**032**	20.50	16.60	**047**	28.00	24.10			
018	13.50	9.60	**033**	21.00	17.10	**048**	28.50	24.60			

How to order

FCZ - xxx - VC xx - 99/XX

Nbr of contacts	Foot Style	Plating	Option
004 to **060**	**50** = normal **51** = reverse	**99** = Tin *(leadfree)*	**RP** = Reel packing; with "PickUp Cap" **RT** = Reel packing; with "PickUp Tape" *(please ask for availability)*

FPC/FFC Connector ZIF Type
- SMT - 0.50mm pitch horizontal

RoHS compliant

E-tec Interconnect

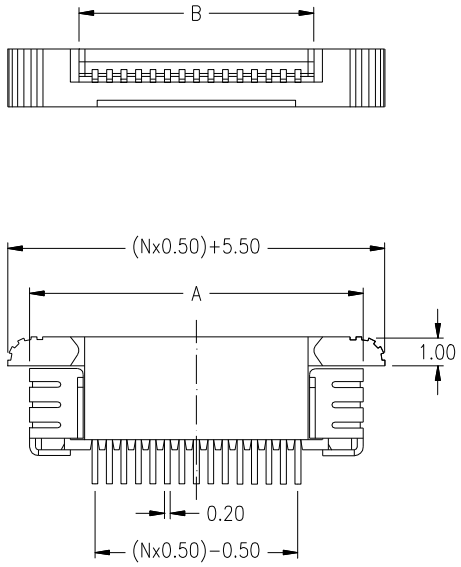

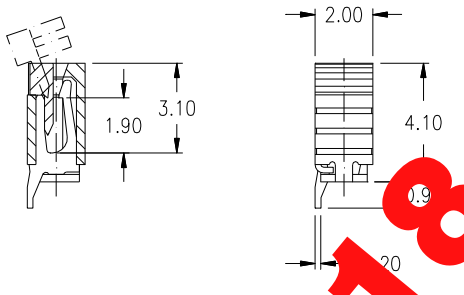

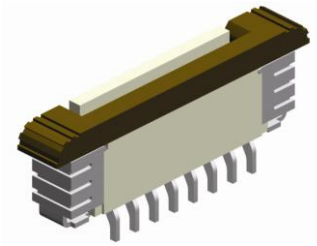

upper contact style 050

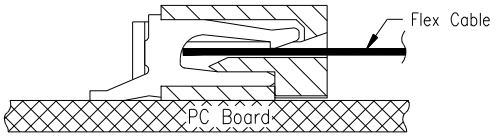

lower contact style 051

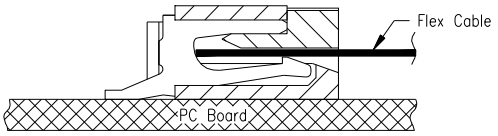

PCB Surface Mount layout

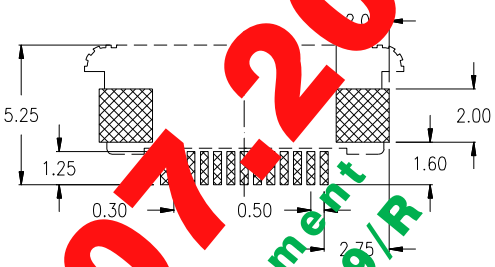

Recommended FPC/FFC dimensions

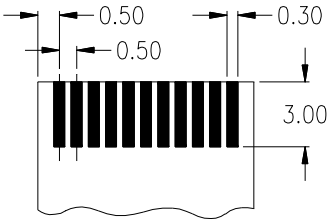

thickness 0.30mm±0.05

SPECIFICATIONS

Current rating	0.4 A max.	Operating temperature	- 55°C to +85°C
Insulator resistance	50 MΩ	Processing temperature	+250°C +0/-5°C for 3sec.
Contact resistance	30 mΩ	Contact material *(RoHS compliant)*	Phosphor Bronze
Withstanding voltage	250 V AC/1 min.	Contact plating	Tin *(leadfree)*
		Insulator material *(RoHS compliant)*	Nylon UL 94 V-0

Dimensions (mm)

Contacts	DIM "A"	DIM "B"	Contacts	DIM "A"	DIM "B"	Contacts	DIM "A"	DIM "B"	Contacts	DIM "A"	DIM "B"
004	6.00	2.60	**016**	12.00	8.60	**028**	18.00	14.60	**040**	24.00	20.60
005	6.50	3.10	**017**	12.50	9.10	**029**	18.50	15.10	**041**	24.50	21.10
006	7.00	3.60	**018**	13.00	9.60	**030**	19.00	15.60	**042**	25.00	21.60
007	7.50	4.10	**019**	13.50	10.10	**031**	19.50	16.10	**043**	25.50	22.10
008	8.00	4.60	**020**	14.00	10.60	**032**	20.00	16.60	**044**	26.00	22.60
009	8.50	[illegible]	**021**	14.50	11.10	**033**	20.50	17.10	**045**	26.50	23.10
010	9.00	[illegible]	**022**	15.00	11.60	**034**	21.00	17.60	**046**	27.00	23.60
011	9.50	[illegible]	**023**	15.50	12.10	**035**	21.50	18.10	**047**	27.50	24.10
012	10.00	[illegible]	**024**	16.00	12.60	**036**	22.00	18.60	**048**	28.00	24.60
013	10.50	[illegible]	**025**	16.50	13.10	**037**	22.50	19.10	**049**	28.50	25.10
014	[illegible]	[illegible]	**026**	17.00	13.60	**038**	23.00	19.60	**050**	29.00	25.60
015	[illegible]	8.10	**027**	17.50	14.10	**039**	23.50	20.10			

How to order

FCZ - xxx - H xxx - 99 / R

Nbr of contacts	Contact style	Plating	Packing
004 to **050**	**050** = upper **051** = lower	**99** = tin *(leadfree)*	**R** Reel packing (Reel packing qty. on request)

EOL 31.07.2018
Recommended Replacement
FCZ-xxx-HC50(HC51)-99/R
See Page 92

FPC/FFC Connector **ZIF** Type

- SMT - 0.50mm pitch horizontal

RoHS compliant

E-tec Interconnect

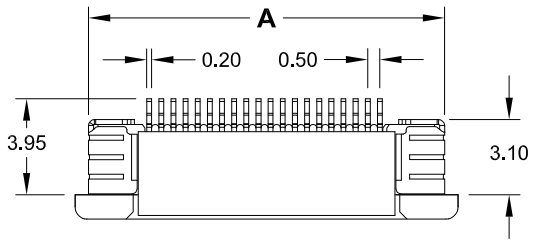

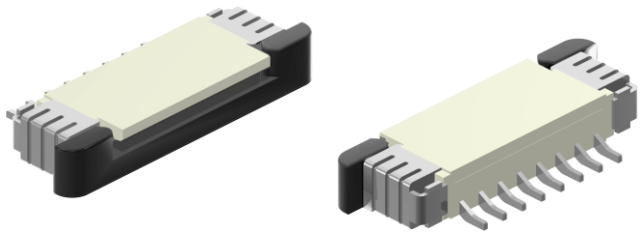

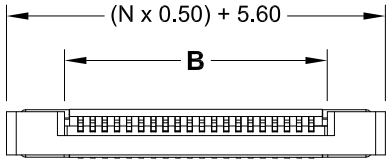

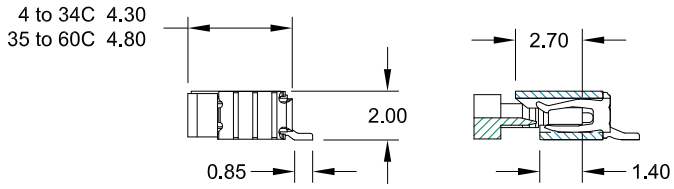

upper contact Style 50

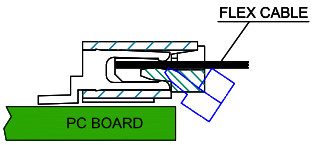

lower contact Style 51

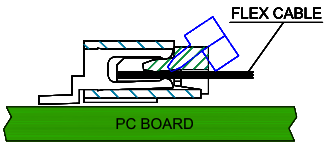

PCB Surface Mount Layout

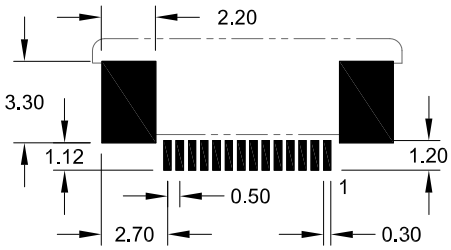

Recommended FPC/FFC dimensions

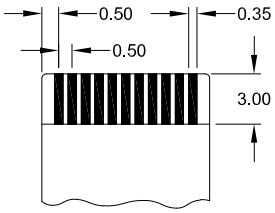

thickness 0.30mm±0.05

SPECIFICATIONS

Current rating	0.5 A max.	Operating temperature	- 20°C to +85°C
Insulation resistance	500 MΩ min.	Processing temperature	+250°C +0/-5°C for 3sec.
Contact resistance	20 mΩ max.	Contact material *(RoHS compliant)*	Phosphor Bronze
Withstanding voltage	200 V AC	Contact plating	Tin *(leadfree)*
		Insulator material *(RoHS compliant)*	LCP UL 94 V-0

Dimensions (mm)

Contacts	DIM "A"	DIM "B"	Contacts	DIM "A"	DIM "B"	Contacts	DIM "A"	DIM "B"	Contacts	DIM "A"	DIM "B"
004	6.50	2.60	**019**	14.00	10.10	**034**	21.50	17.60	**049**	29.00	25.10
005	7.00	3.10	**020**	14.50	10.60	**035**	22.00	18.10	**050**	29.50	25.60
006	7.50	3.60	**021**	15.00	11.10	**036**	22.50	18.60	**051**	30.00	26.10
007	8.00	4.10	**022**	15.50	11.60	**037**	23.00	19.10	**052**	30.50	26.60
008	8.50	4.60	**023**	16.00	12.10	**038**	23.50	19.60	**053**	31.00	27.10
009	9.00	5.10	**024**	16.50	12.60	**039**	24.00	20.10	**054**	31.50	27.60
010	9.50	5.60	**025**	17.00	13.10	**040**	24.50	20.60	**055**	32.00	28.10
011	10.00	6.10	**026**	17.50	13.60	**041**	25.00	21.10	**056**	32.50	28.60
012	10.50	6.60	**027**	18.00	14.10	**042**	25.50	21.60	**057**	33.00	29.10
013	11.00	7.10	**028**	18.50	14.60	**043**	26.00	22.10	**058**	33.50	29.60
014	11.50	7.60	**029**	19.00	15.10	**044**	26.50	22.60	**059**	34.00	30.10
015	12.00	8.10	**030**	19.50	15.60	**045**	27.00	23.10	**060**	34.50	30.60
016	12.50	8.60	**031**	20.00	16.10	**046**	27.50	23.60			
017	13.00	9.10	**032**	20.50	16.60	**047**	28.00	24.10			
018	13.50	9.60	**033**	21.00	17.10	**048**	28.50	24.60			

How to order

FCZ - xxx - HC xx - 99 /R

Nbr of contacts	Contact Style	Plating	Packing
004 to **060**	**50** = upper **51** = lower	**99** = tin *(leadfree)*	**/R** Reel packing (Reel packing qty. on request)

FPC/FFC Connector **ZIF** Type
- SMT - 0.50mm pitch vertical

RoHS compliant

E-tec Interconnect

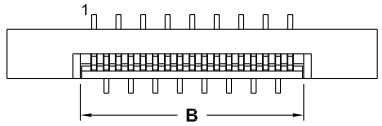

V052

Foot Style

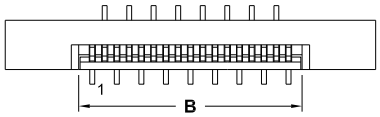

V053

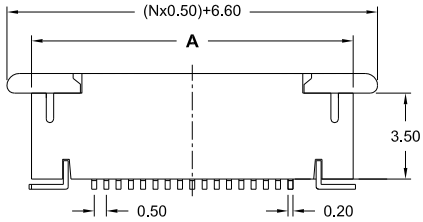

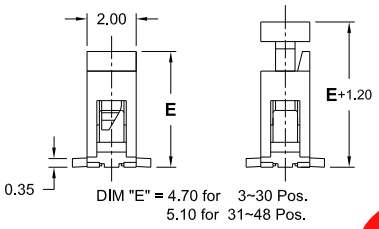

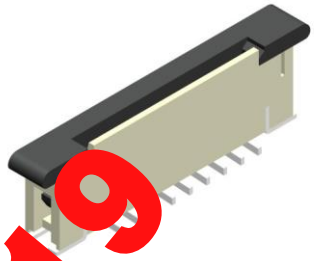

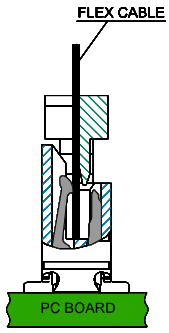

PCB Surface Mount Layout

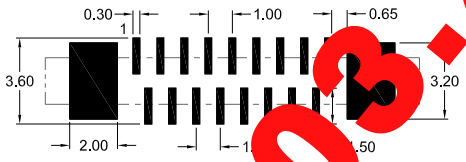

V052

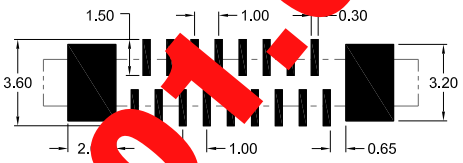

V053

Recommended FPC/FFC dimensions

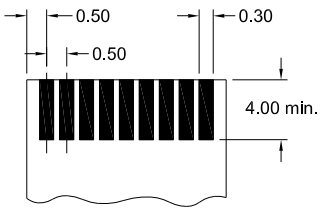

thickness 0.30mm±0.05

01.03.2019

Specifications

Current rating	0.5 A max.
Insulation resistance	500 MΩ min.
Contact resistance	20 mΩ max.
Withstanding voltage	200 V AC

Operating temperature	- 20°C to +85°C
Processing temperature	+250°C +0/-5°C for 3sec.
Contact material *(RoHS compliant)*	Phosphor Bronze
Contact plating	Tin *(leadfree)*
Insulator material *(RoHS compliant)*	PA46 UL 94 V-0
Actuator material *(RoHS compliant)*	PA9T UL 94 V-0

EOL

Dimensions (mm)

Contacts	DIM "A"	DIM "B"	Contacts	DIM "A"	DIM "B"	Contacts	DIM "A"	DIM "B"	Contacts	DIM "A"	DIM "B"
003	8.10	2.10	**015**	14.10	8.10	**027**	20.10	14.10	**039**	26.10	20.10
004	8.60	[illegible]	**016**	14.60	8.60	**028**	20.60	14.60	**040**	26.60	20.60
005	9.10	[illegible]	**017**	15.10	9.10	**029**	21.10	15.10	**041**	27.10	21.10
006	9.[illegible]	3.60	**018**	15.60	9.60	**030**	21.60	15.60	**042**	27.60	21.60
007	10.[illegible]	[illegible]0	**019**	16.10	10.10	**031**	22.10	16.10	**043**	28.10	22.10
008	10.60	4.60	**020**	16.60	10.60	**032**	22.60	16.60	**044**	28.60	22.60
009	11.10	5.10	**021**	17.10	11.10	**033**	23.10	17.10	**045**	29.10	23.10
010	11.60	5.60	**022**	17.60	11.60	**034**	23.60	17.60	**046**	29.60	23.60
011	12.10	6.10	**023**	18.10	12.10	**035**	24.10	18.10	**047**	30.10	24.10
012	12.60	6.60	**024**	18.60	12.60	**036**	24.60	18.60	**048**	30.60	24.60
013	13.10	7.10	**025**	19.10	13.10	**037**	25.10	19.10			
014	13.60	7.60	**026**	19.60	13.60	**038**	25.60	19.60			

How to order

FCZ - xxx - V xxx - 99 /X

Nbr of contacts	Foot Style	Plating	Packing
003 to **048**	**052** = normal **053** = reverse	**99** = Tin *(leadfree)*	**/R** if Reel packing (Reel packing qty. on request)

FPC/FFC Connector **ZIF** Type
- SMT - 0.50mm pitch horizontal

RoHS compliant

E-tec Interconnect

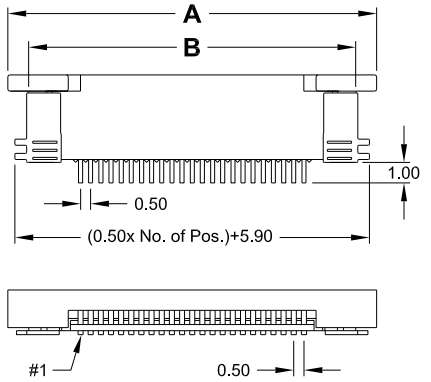

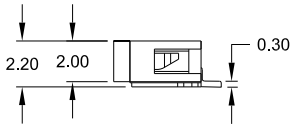

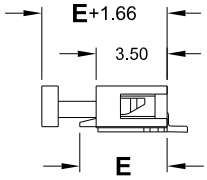

DIM "E" = 4.30 for 3 ~ 30
= 4.70 for 31 ~ 60 Pos.

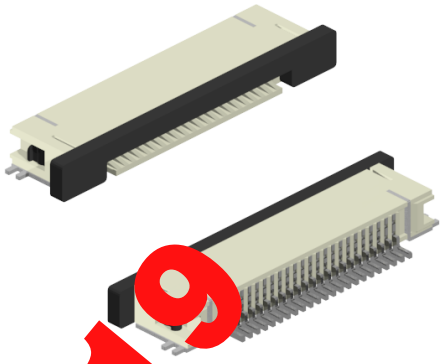

upper contact Style 052

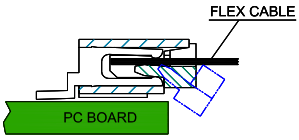

lower contact Style 053

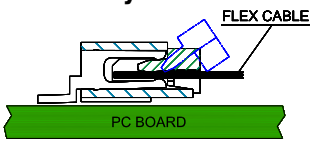

PCB Surface Mount Layout

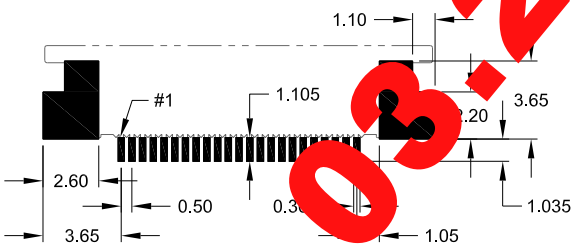

Recommended FPC/FFC dimensions

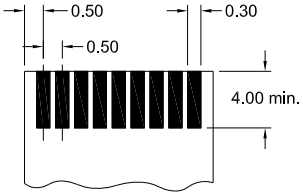

thickness 0.30mm±0.05

Specifications

Current rating	0.5 A max.	Operating temperature	- 20°C to +80°C
Insulation resistance	500 MΩ min.	Processing temperature	+250°C +0/-5°C for 3sec.
Contact resistance	20 mΩ max.	Contact material *(RoHS compliant)*	Phosphor Bronze
Withstanding voltage	200 V AC	Contact plating	Tin *(leadfree)*
		Insulator material *(RoHS compliant)*	PA46 UL 94 V-0
		Actuator material *(RoHS compliant)*	PA9T UL 94 V-0

Dimensions (mm)

Contacts	DIM "A"	DIM "B"	Contacts	DIM "A"	DIM "B"	Contacts	DIM "A"	DIM "B"	Contacts	DIM "A"	DIM "B"
003	8.10	6.10	**018**	15.60	13.60	**033**	23.10	21.10	**048**	30.60	28.60
004	8.60	6.60	**019**	16.10	14.10	**034**	23.60	21.60	**049**	31.10	29.10
005	9.10	7.10	[illegible]	16.60	14.60	**035**	24.10	22.10	**050**	31.60	29.60
006	9.60	7.60	**021**	17.10	15.10	**036**	24.60	22.60	**051**	32.10	30.10
007	10.10	8.[illegible]	**022**	17.60	15.60	**037**	25.10	23.10	**052**	32.60	30.60
008	10.60	8.[illegible]	**023**	18.10	16.10	**038**	25.60	23.60	**053**	33.10	31.10
009	11.10	9.10	**024**	18.60	16.60	**039**	26.10	24.10	**054**	33.60	31.60
010	11.60	[illegible]	**025**	19.10	17.10	**040**	26.60	24.60	**055**	34.10	32.10
011	12.10	[illegible]	**026**	19.60	17.60	**041**	27.10	25.10	**056**	34.60	32.60
012	12.60	[illegible]	**027**	20.10	18.10	**042**	27.60	25.60	**057**	35.10	33.10
013	13.10	[illegible]	**028**	20.60	18.60	**043**	28.10	26.10	**058**	35.60	33.60
014	13.60	11.60	**029**	21.10	19.10	**044**	28.60	26.60	**059**	36.10	34.10
015	14.10	12.10	**030**	21.60	19.60	**045**	29.10	27.10	**060**	36.60	34.60
016	14.60	12.60	**031**	22.10	20.10	**046**	29.60	27.60			
017	15.10	13.10	**032**	22.60	20.60	**047**	30.10	28.10			

EOL 01.03.2019

How to order

FCZ - xxx - H xxx - 99 /X

Nbr of contacts	Contact Style	Plating	Packing
003 to **060**	**052** = upper **053** = lower	**99** = Tin *(leadfree)*	**/R** if Reel packing (Reel packing qty. on request)

FPC/FFC Connector **ZIF** "Easy-on" Type
- SMT - 0.50mm pitch horizontal

RoHS compliant

E-tec Interconnect

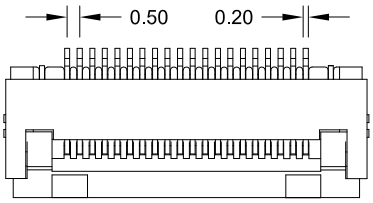

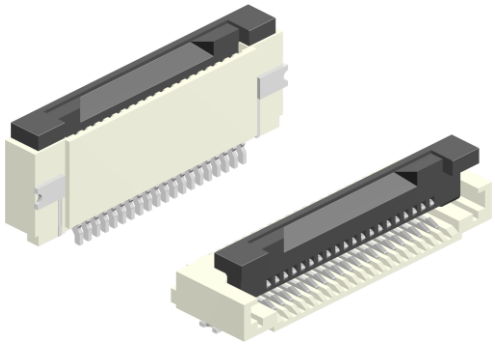

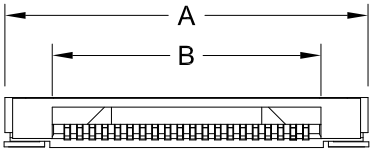

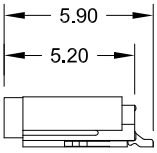

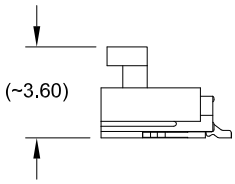

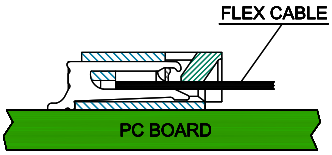

PCB Surface Mount Layout

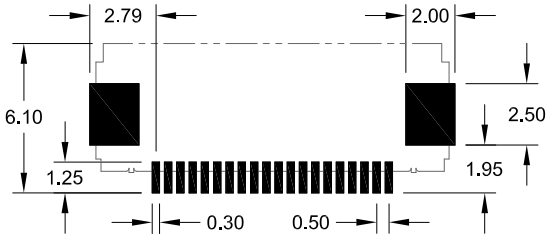

Recommended FPC/FFC dimensions

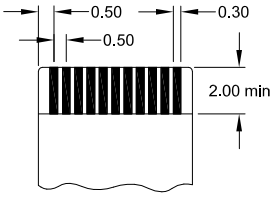

thickness 0.30mm±0.05

Specifications

Current rating	0.5 A max.	Operating temperature	- 20°C to +85°C
Insulation resistance	500 MΩ min.	Processing temperature	+250°C +0/-5°C for 3sec.
Contact resistance	20 mΩ max.	Contact material *(RoHS compliant)*	Phosphor Bronze
Withstanding voltage	200 V AC	Contact plating	Tin *(leadfree)*
		Insulator material *(RoHS compliant)*	LCP (Natural) UL 94 V-0
		Actuator material *(RoHS compliant)*	LCP (Black) UL 94 V-0

Dimensions (mm)

Contacts	DIM "A"	DIM "B"	Contacts	DIM "A"	DIM "B"	Contacts	DIM "A"	DIM "B"	Contacts	DIM "A"	DIM "B"
006	7.40	3.60	**020**	14.40	10.60	**034**	21.40	17.60	**048**	28.40	24.60
007	7.90	4.10	**021**	14.90	11.10	**035**	21.90	18.10	**049**	28.90	25.10
008	8.40	4.60	**022**	15.40	11.60	**036**	22.40	18.60	**050**	29.40	25.60
009	8.90	5.10	**023**	15.90	12.10	**037**	22.90	19.10	**051**	29.90	26.10
010	9.40	5.60	**024**	16.40	12.60	**038**	23.40	19.60	**052**	30.40	26.60
011	9.90	6.10	**025**	16.90	13.10	**039**	23.90	20.10	**053**	30.90	27.10
012	10.40	6.60	**026**	17.40	13.60	**040**	24.40	20.60	**054**	31.40	27.60
013	10.90	7.10	**027**	17.90	14.10	**041**	24.90	21.10	**055**	31.90	28.10
014	11.40	7.60	**028**	18.40	14.60	**042**	25.40	21.60	**056**	32.40	28.60
015	11.90	8.10	**029**	18.90	15.10	**043**	25.90	22.10	**057**	32.90	29.10
016	12.40	8.60	**030**	19.40	15.60	**044**	26.40	22.60	**058**	33.40	29.60
017	12.90	9.10	**031**	19.90	16.10	**045**	26.90	23.10	**059**	33.90	30.10
018	13.40	9.60	**032**	20.40	16.60	**046**	27.40	23.60	**060**	34.40	30.60
019	13.90	10.10	**033**	20.90	17.10	**047**	27.90	24.10			

How to order

FCZ - xxx - H058 - 99 /R

Nbr of contacts	Plating	Packing
003 to **060**	**99** = Tin *(leadfree)*	**/R** Reel packing (Reel packing qty. on request)

FPC/FFC Connector **ZIF** "Easy-on" Type
- SMT - 0.80mm pitch horizontal

RoHS compliant

E-tec Interconnect

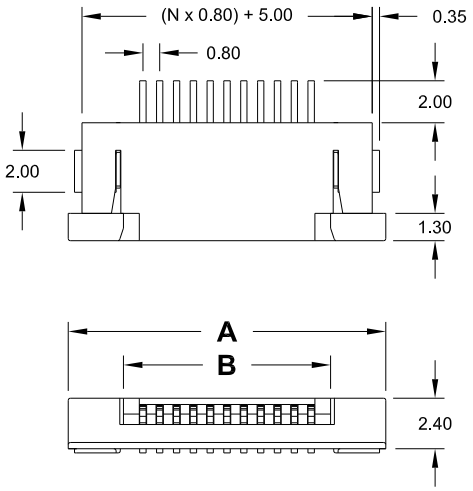

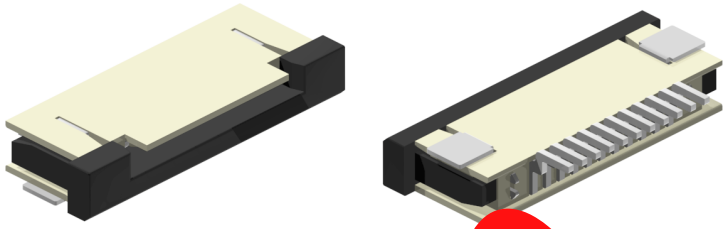

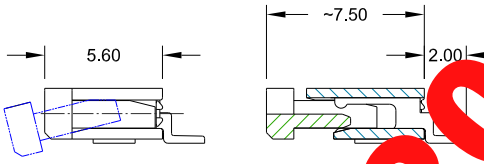

upper contact Style 080

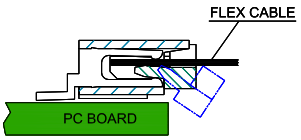

lower contact Style 081

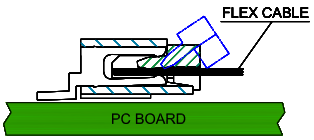

PCB Surface Mount Layout

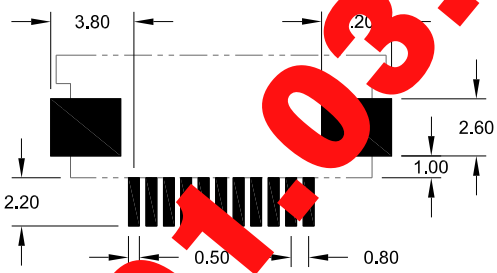

Recommended FPC/FFC dimensions

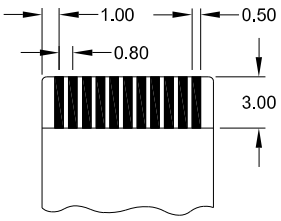

thickness 0.30mm±0.05

Specifications

Current rating	0.5 A max.
Insulation resistance	500 MΩ min.
Contact resistance	20 mΩ max.
Withstanding voltage	200 V AC

Operating temperature		- 20°C to +85°C
Processing temperature		+250°C +0/-5°C for 3sec.
Contact material	*(RoHS compliant)*	Phosphor Bronze
Contact plating		Tin *(leadfree)*
Insulator material	*(RoHS compliant)*	LCP (white) UL 94 V-0
Actuator material	*(RoHS compliant)*	PA46 (black) UL 94 V-0

Dimensions (mm)

Contacts	DIM "A"	DIM "B"	Contacts	DIM "A"	DIM "B"	Contacts	DIM "A"	DIM "B"	Contacts	DIM "A"	DIM "B"
004	9.50	4.84	**012**	15.90	11.24	**020**	22.30	17.64	**028**	28.70	24.04
005	10.30	5.64	**013**	16.70	12.04	**021**	23.10	18.44	**029**	29.50	24.84
006	11.10	6.44	**014**	17.50	12.84	**022**	23.90	19.24	**030**	30.30	25.64
007	11.90	7.24	**015**	18.30	13.64	**023**	24.70	20.04	**031**	31.10	26.44
008	12.70	8.04	**016**	19.10	14.44	**024**	25.50	20.84	**032**	31.90	27.24
009	13.50	8.84	**017**	19.90	15.24	**025**	26.30	21.64			
010	14.30	9.64	**018**	20.70	16.04	**026**	27.10	22.44			
011	15.10	10.44	**019**	21.50	16.84	**027**	27.90	23.24			

How to order

FCZ - xxx - H xxx - 99 /X

Nbr of contacts	Contact Style	Plating	Packing
004 to **032**	**080** = upper **081** = lower	**99** = Tin *(leadfree)*	**/R** if Reel packing (Reel packing qty. on request)

EOL 01.03.2019

FPC/FFC Connector ZIF Type
- SMT - 1.00mm pitch vertical

RoHS compliant

E-tec Interconnect

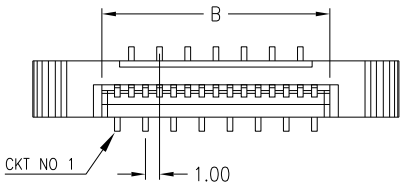

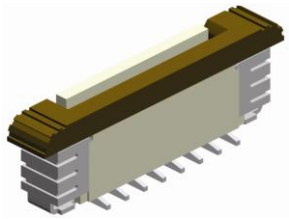

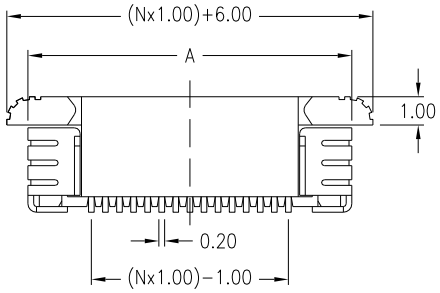

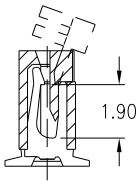

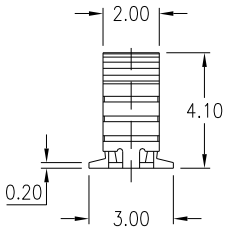

Standard:
Connector with PickUp Cap and Reel packing

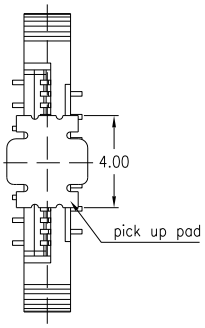

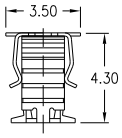

Please ask your sales office for details on Reel dimension.

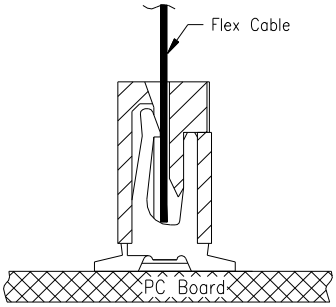

PCB Surface Mount Layout

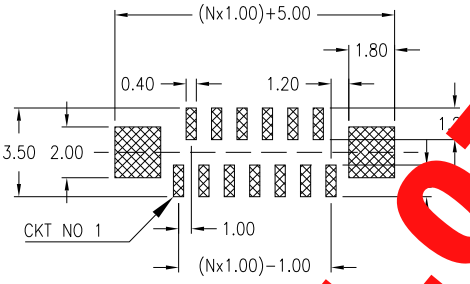

Recommended FPC/FFC dimensions

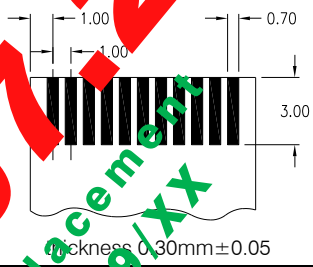

SPECIFICATIONS

Current rating	0.4 A max.		Operating temperature	- 55°C to +85°C
Insulator resistance	50 MΩ min.		Processing temperature	+250°C +0/-5°C for 3 sec.
Contact resistance	30 mΩ max.		Contact material *(RoHS compliant)*	Phosphor Bronze
Withstanding voltage	250 V AC/1 Min.		Contact plating	Tin *(leadfree)*
			Insulator material *(RoHS compliant)*	Nylon UL 94 V-0

Dimensions (mm)

Contacts	DIM "A"	DIM "B"	Contacts	DIM "A"	DIM "B"	Contacts	DIM "A"	DIM "B"	Contacts	DIM "A"	DIM "B"
004	8.50	5.10	**010**	14.50	11.10	**016**	20.50	17.10	**022**	26.50	23.10
005	9.50	6.10	[illegible]	15.50	12.10	**017**	21.50	18.10	**023**	27.50	24.10
006	10.50	7.10	**012**	16.50	13.10	**018**	22.50	19.10	**024**	28.50	25.10
007	11.50	8.1[illegible]	**013**	17.50	14.10	**019**	23.50	20.10			
008	12.50	9.1[illegible]	**014**	18.50	15.10	**020**	24.50	21.10			
009	13.50	[illegible].10	**015**	19.50	16.10	**021**	25.50	22.10			

EOL 31.07.2018

Recommended Replacement FCZ-xxx-VZ100-99/XX

See Page 97

How to order

FCZ - xxx - V 100 - 99 / RP

Nbr of contacts	Plating	Packing
004 to **024**	**99** = tin *(leadfree)*	**RP** Reel packing, connector with "PickUp Cap" (Reel packing qty. on request)

FPC/FFC Connector **ZIF** Type

- SMT - 1.00mm pitch vertical

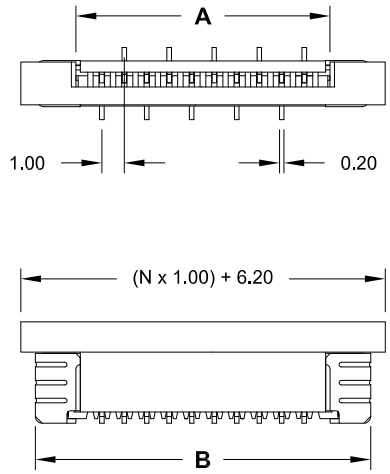

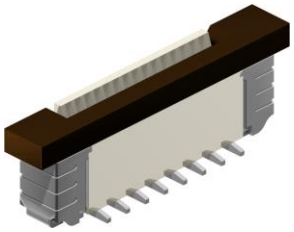

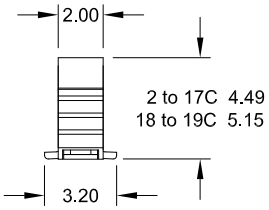

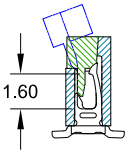

Standard:
Connector with PickUp Tape and Reel packing

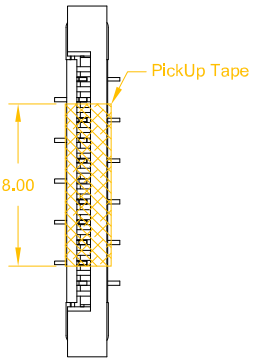

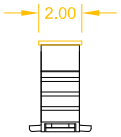

Please ask your sales office for details on reel dimension.

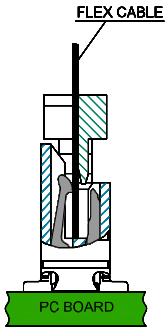

PCB Surface Mount Layout

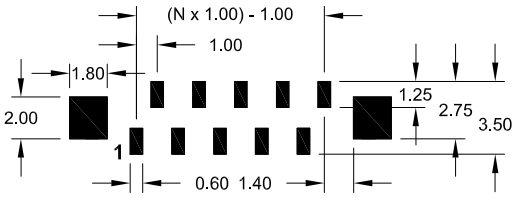

Recommended FPC/FFC dimensions

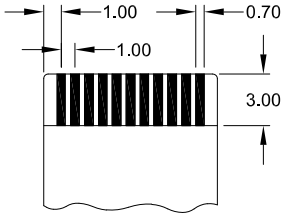

thickness 0.30mm±0.05

SPECIFICATIONS

Current rating	0.5 A max.
Insulation resistance	500 MΩ min.
Contact resistance	30 mΩ max.
Withstanding voltage	500 V AC

Operating temperature		- 20°C to +85°C
Processing temperature		+250°C +0/-5°C for 3sec.
Contact material	*(RoHS compliant)*	Phosphor Bronze
Contact plating		Tin *(leadfree)*
Insulator material	*(RoHS compliant)*	LCP (beige) UL 94 V-0
Actuator material	*(RoHS compliant)*	PPS (black) UL 94 V-0

Dimensions (mm)

Contacts	DIM "A"	DIM "B"	Contacts	DIM "A"	DIM "B"	Contacts	DIM "A"	DIM "B"	Contacts	DIM "A"	DIM "B"
002	3.06	6.90	**007**	8.06	11.90	**012**	13.06	16.90	**017**	18.06	21.90
003	4.06	7.90	**008**	9.06	10.90	**013**	14.06	17.90	**018**	19.06	22.90
004	5.06	8.90	**009**	10.06	13.90	**014**	15.06	18.90	**019**	20.06	23.90
005	6.06	9.90	**010**	11.06	14.90	**015**	16.06	19.90			
006	7.06	10.90	**011**	12.06	15.90	**016**	17.06	20.90			

How to order

FCZ - xxx - VZ100 - 99 / RT

Nbr of contacts	Plating	Packing
002 to **019**	**99** = Tin *(leadfree)*	**RT** = Reel packing, connector with "PickUp Tape" (Reel packing QTY. on request)

FPC/FFC Connector **ZIF** Type

- SMT - 1.00mm pitch horizontal

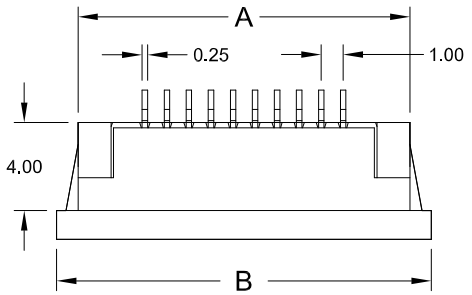

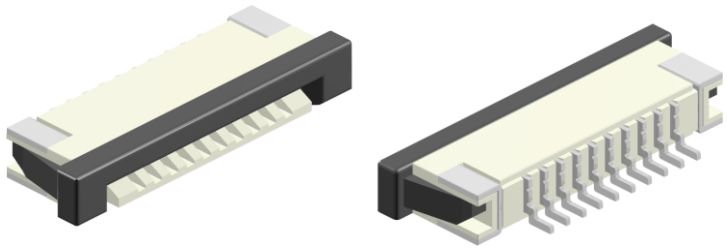

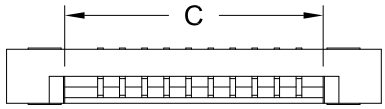

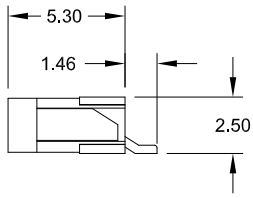

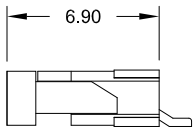

upper contact Style 102

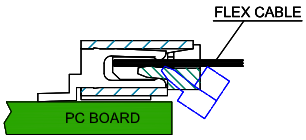

lower contact Style 103

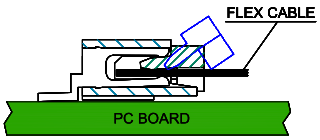

PCB Surface Mount Layout

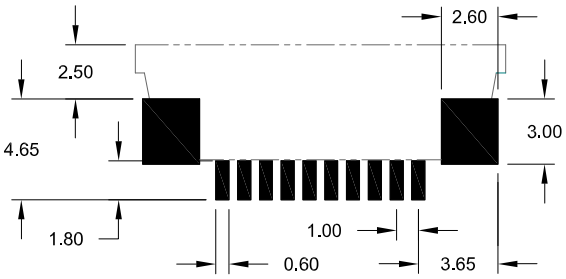

Recommended FPC/FFC dimensions

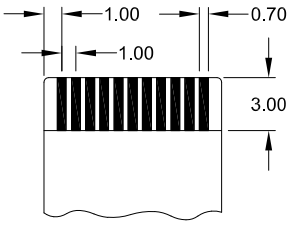

thickness 0.30mm±0.05

SPECIFICATIONS

Current rating	0.5 A max.
Insulation resistance	500 MΩ min.
Contact resistance	30 mΩ max.
Withstanding voltage	500 V AC

Operating temperature		- 20°C to +85°C
Processing temperature		+250°C +0/-5°C for 3sec.
Contact material	*(RoHS compliant)*	Phosphor Bronze
Contact plating		Tin *(leadfree)*
Insulator material	*(RoHS compliant)*	LCP (nature) UL 94 V-0
Actuator material	*(RoHS compliant)*	LCP (black) UL 94 V-0

Dimensions (mm)

Contacts	DIM "A"	DIM "B"	DIM "C"	Contacts	DIM "A"	DIM "B"	DIM "C"	Contacts	DIM "A"	DIM "B"	DIM "C"
004	9.05	11.00	5.10	**013**	18.05	20.00	14.10	**022**	27.05	29.00	23.10
005	10.05	12.00	6.10	**014**	19.05	21.00	15.10	**023**	28.05	30.00	24.10
006	11.05	13.00	7.10	**015**	20.05	22.00	16.10	**024**	29.05	31.00	25.10
007	12.05	14.00	8.10	**016**	21.05	23.00	17.10	**025**	30.05	32.00	26.10
008	13.05	15.00	9.10	**017**	22.05	24.00	18.10	**026**	31.05	33.00	27.10
009	14.05	16.00	10.10	**018**	23.05	25.00	19.10	**027**	32.05	34.00	28.10
010	15.05	17.00	11.10	**019**	24.05	26.00	20.10	**028**	33.05	35.00	29.10
011	16.05	18.00	12.10	**020**	25.05	27.00	21.10	**029**	34.05	36.00	20.10
012	17.05	19.00	13.10	**021**	26.05	28.00	22.10	**030**	35.05	37.00	31.10

How to order

FCZ - xxx - H xxx - 99 /R

Nbr of contacts	Contact Style	Plating	Packing
004 to **030**	**102** = upper **103** = lower	**99** = Tin *(leadfree)*	**/R** Reel packing (Reel packing qty. on request)

FPC/FFC Connector **ZIF** Type
- SMT - 1.00mm pitch vertical

RoHS compliant

E-tec Interconnect

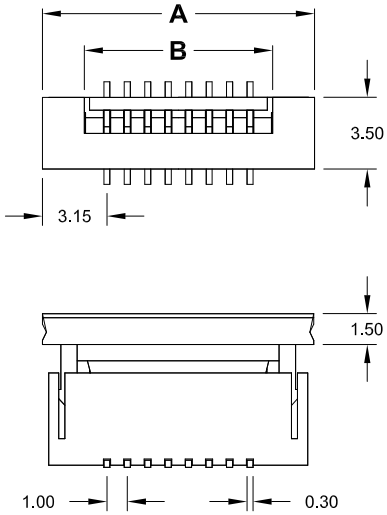

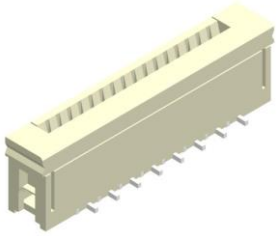

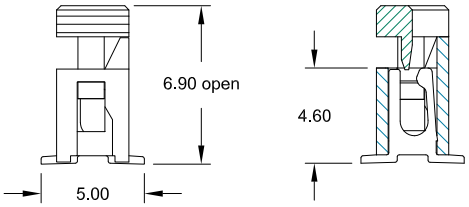

Optional:
Connector with PickUp Cap and Reel packing

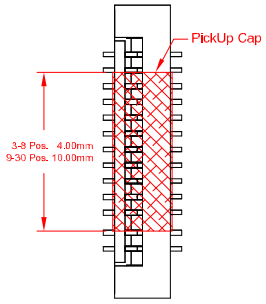

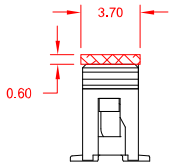

Please ask your sales office for details on Reel dimension.

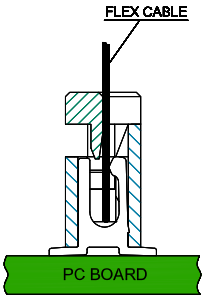

PCB Surface Mount Layout

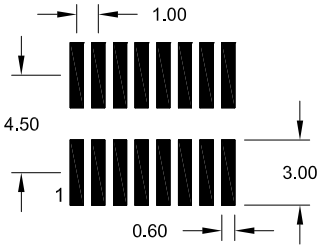

Recommended FPC/FFC dimensions

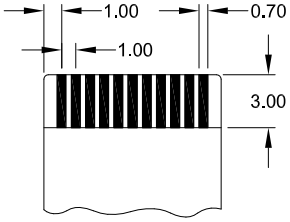

thickness 0.30mm±0.05

Specifications

Current rating	0.5 A max.	Operating temperature	- 20°C to +85°C
Insulation resistance	500 MΩ min.	Processing temperature	+250°C +0/-5°C for 3sec.
Contact resistance	30 mΩ max.	Contact material *(RoHS compliant)*	Phosphor Bronze
Withstanding voltage	500 V AC	Contact plating	Tin *(leadfree)*
		Insulator material *(RoHS compliant)*	LCP UL 94 V-0
		Actuator material *(RoHS compliant)*	LCP UL 94 V-0

Dimensions (mm)

Contacts	DIM "A"	DIM "B"	Contacts	DIM "A"	DIM "B"	Contacts	DIM "A"	DIM "B"	Contacts	DIM "A"	DIM "B"
003	8.00	4.20	**010**	15.00	11.20	**017**	22.00	18.20	**024**	29.00	25.20
004	9.00	5.20	**011**	16.00	12.20	**018**	23.00	19.20	**025**	30.00	26.20
005	10.00	6.20	**012**	17.00	13.20	**019**	24.00	20.20	**026**	31.00	27.20
006	11.00	7.20	**013**	18.00	14.20	**020**	25.00	21.20	**027**	32.00	28.20
007	12.00	8.20	**014**	19.00	15.20	**021**	26.00	22.20	**028**	33.00	29.20
008	13.00	9.20	**015**	20.00	16.20	**022**	27.00	23.20	**029**	34.00	30.20
009	14.00	10.20	**016**	21.00	17.20	**023**	28.00	24.20	**030**	35.00	31.20

How to order

FCZ - xxx - V115 - 99/RP

Nbr of contacts	Plating	Option
003 to **030**	**99** = Tin *(leadfree)*	**RP** Reel packing, connector with "PickUp Cap" (Reel packing qty. on request)

FPC/FFC Connector ZIF Type
- SMT - 1.00mm pitch horizontal

RoHS 2002/95/EC compliant

E-tec Interconnect

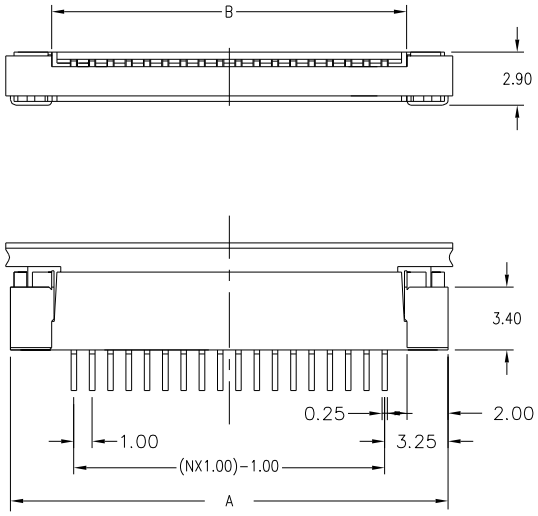

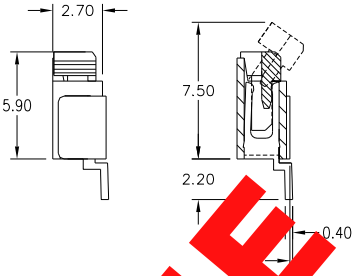

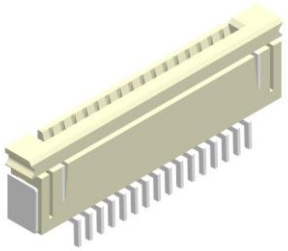

upper contact style 115

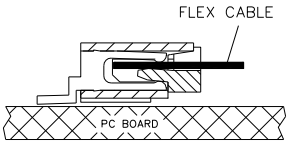

lower contact style 116

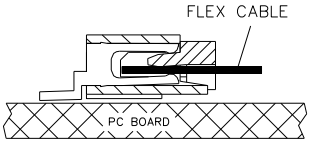

PCB Surface Mount Layout

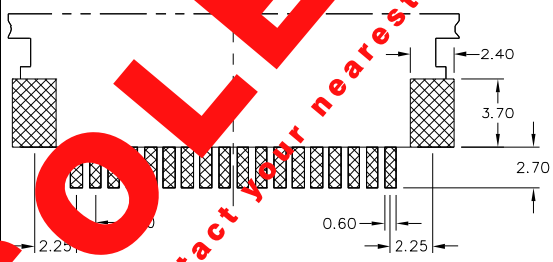

Recommended FPC/FFC dimensions

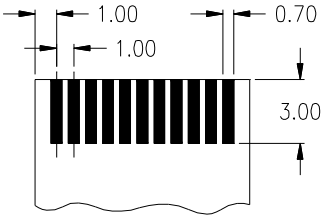

thickness 0.30mm±0.05

OBSOLETE
For replacement pls. contact your nearest E-tec office

SPECIFICATIONS

Current rating	.5 A max.
Insulator resistance	100 MΩ min.
Contact resistance	20 mΩ max.
Withstanding voltage	500 V AC/1 Min.

Operating temperature		- 40°C to +105°C.
Processing temperature		+250°C +0/-5°C for 3sec.
Contact material	*(RoHS compliant)*	Phosphor Bronze
Contact plating		Tin *(leadfree)*
Insulator material	*(RoHS compliant)*	LCP UL 94 V-0
Actuator material	*(RoHS compliant)*	PPA UL 94 V-0

Dimensions (mm)

Contacts	DIM "A"	DIM "B"	Contacts	DIM "A"	DIM "B"	Contacts	DIM "A"	DIM "B"	Contacts	DIM "A"	DIM "B"
003	8.50	4.20	**011**	16.50	12.20	**019**	24.50	20.20	**027**	32.50	28.20
004	9.50	5.20	**012**	17.50	13.20	**020**	25.50	21.20	**028**	33.50	29.20
005	10.50	6.20	**013**	18.50	14.20	**021**	26.50	22.20	**029**	34.50	30.20
006	11.50	7.20	**014**	19.50	15.20	**022**	27.50	23.20	**030**	35.50	31.20
007	12.50	8.20	**015**	20.50	16.20	**023**	28.50	24.20	**031**	36.50	32.20
008	13.50	9.20	**016**	21.50	17.20	**024**	29.50	25.20	**032**	37.50	33.20
009	14.50	10.20	**017**	22.50	18.20	**025**	30.50	26.20			
010	15.50	11.20	**018**	23.50	19.20	**026**	31.50	27.20			

How to order

FCZ - xxx – H xxx - 99 / X

Nbr of contacts	Contact style	Plating	Option
003 to **032**	**115** = upper **116** = lower	**99** = tin *(leadfree)*	**R** If Reel packing (Reel packing qty. on request)

FPC/FFC Connector ZIF Type
- THT - 1.00mm pitch vertical

RoHS compliant

E-tec Interconnect

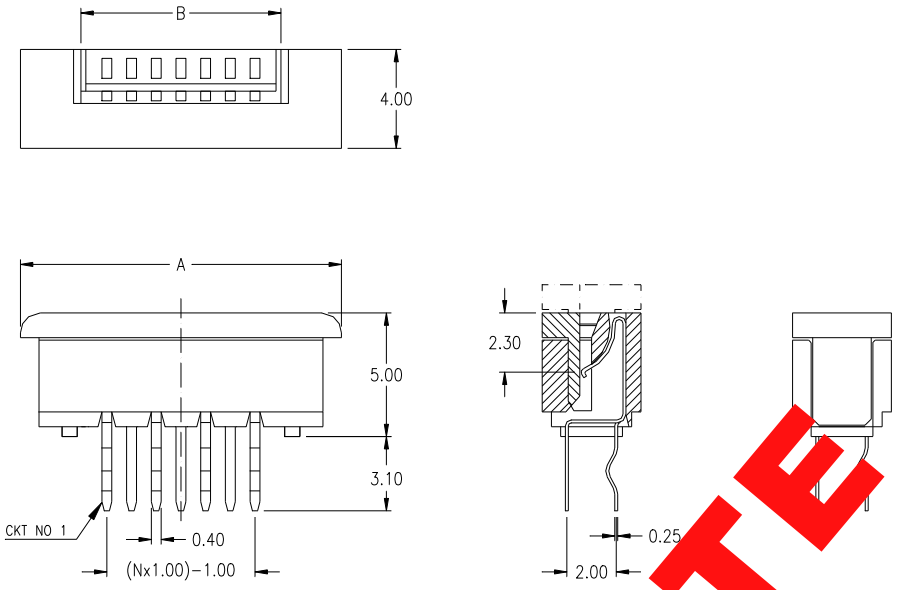

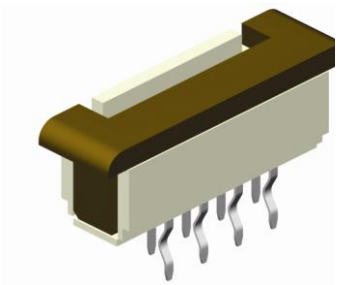

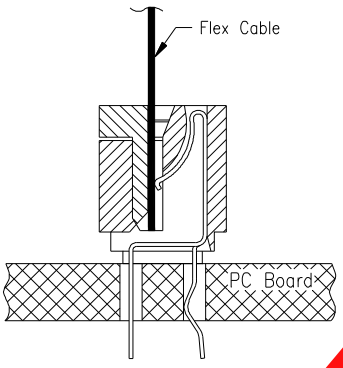

PCB Hole Layout

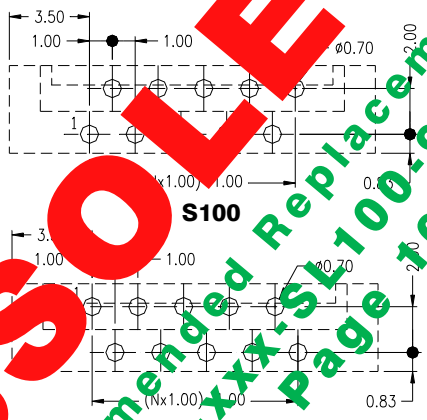

Recommended FPC/FFC dimensions

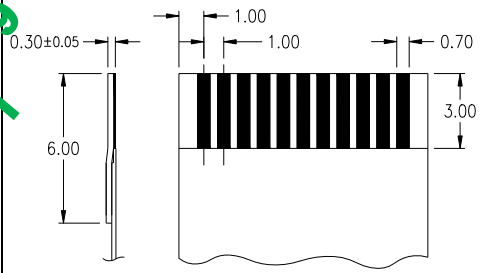

OBSOLETE
Recommended Replacement
FCZ-xxx-SL100-99
see page 101

SPECIFICATIONS

Current rating	0.4 A max.	Operating temperature	- 55°C to +85°C
Insulator resistance	500 MΩ min.	Contact material *(RoHS compliant)*	Phosphor Bronze
Contact resistance	30 mΩ max.	Contact plating	Tin *(leadfree)*
Withstanding voltage	250 V AC/1 Min.	Insulator material *(RoHS compliant)*	Nylon UL 94 V-0

Dimensions (mm)

Contacts	DIM "A"	DIM "B"	Contacts	DIM "A"	DIM "B"	Contacts	DIM "A"	DIM "B"	Contacts	DIM "A"	DIM "B"
004	10.00	5.20	**012**	18.00	13.20	**020**	26.00	21.20	**028**	34.00	29.20
005	11.00	6.20	**013**	19.00	14.20	**021**	27.00	22.20	**029**	35.00	30.20
006	12.00	7.20	**014**	20.00	15.20	**022**	28.00	23.20	**030**	36.00	31.20
007	13.00	8.20	**015**	21.00	16.20	**023**	29.00	24.20	**031**	37.00	32.20
008	14.00	9.20	**016**	22.00	17.20	**024**	30.00	25.20	**032**	38.00	33.20
009	15.00	10.20	**017**	23.00	18.20	**025**	31.00	26.20			
010	16.00	11.20	**018**	24.00	19.20	**026**	32.00	27.20			
011	17.00	12.20	**019**	25.00	20.20	**027**	33.00	28.20			

How to order

FCZ - xxx - SX100 - 99

Nbr of contacts	Foot Type	Plating
004 to **032**	**S100** = standard foot **SR100** = reverse foot	**99** = tin *(leadfree)*

FPC/FFC Connector **ZIF** Type

- THT - 1.00mm pitch vertical

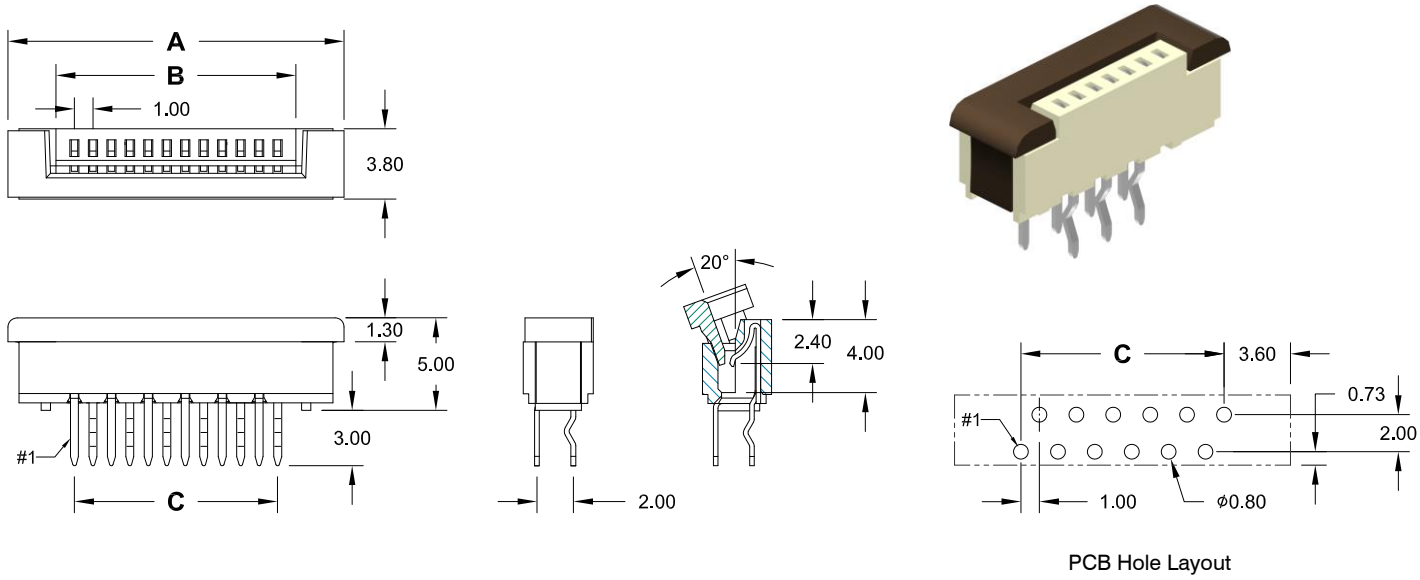

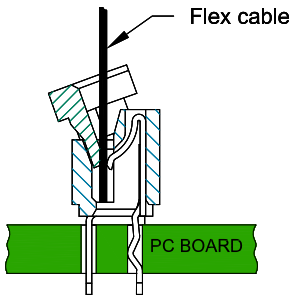

Recommended FPC/FFC dimensions

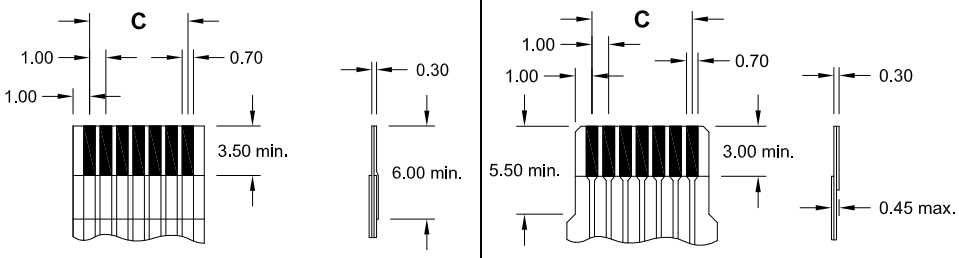

Specifications

Current rating	0.5 A max.	Operating temperature	- 20°C to +85°C
Insulation resistance	500 MΩ min.	Contact material *(RoHS compliant)*	Phosphor Bronze
Contact resistance	30 mΩ max.	Contact plating	Tin *(leadfree)*
Withstanding voltage	500 V AC	Insulator material *(RoHS compliant)*	PA6T (natural) UL 94 V-0
		Actuator material *(RoHS compliant)*	PA6T (brown) UL 94 V-0

Dimensions (mm)

Contacts	DIM "A"	DIM "B"	DIM "C"	Contacts	DIM "A"	DIM "B"	DIM "C"	Contacts	DIM "A"	DIM "B"	DIM "C"	Contacts	DIM "A"	DIM "B"	DIM "C"
004	10.20	5.10	3.00	**012**	18.20	13.10	11.00	**020**	26.20	21.10	19.00	**028**	34.20	29.10	27.00
005	11.20	6.10	4.00	**013**	19.20	14.10	12.00	**021**	27.20	22.10	20.00	**029**	35.20	30.10	28.00
006	12.20	7.10	5.00	**014**	20.20	15.10	13.00	**022**	28.20	23.10	21.00	**030**	36.20	31.10	29.00
007	13.20	8.10	6.00	**015**	21.20	16.10	14.00	**023**	29.20	24.10	22.00	**031**	37.20	32.10	30.00
008	14.20	9.10	7.00	**016**	22.20	17.10	15.00	**024**	30.20	25.10	23.00	**032**	38.20	33.10	31.00
009	15.20	10.10	8.00	**017**	23.20	18.10	16.00	**025**	31.20	26.10	24.00				
010	16.20	11.10	9.00	**018**	24.20	19.10	17.00	**026**	32.20	27.10	25.00				
011	17.20	12.10	10.00	**019**	25.20	20.10	18.00	**027**	33.20	28.10	26.00				

How to order

FCZ - xxx - SL100 - 99

Nbr of contacts	Plating
004 to **032**	**99** = Tin *(leadfree)*

FPC/FFC Connector ZIF Type
- THT - 1.00mm pitch right angle

RoHS compliant

E-tec Interconnect

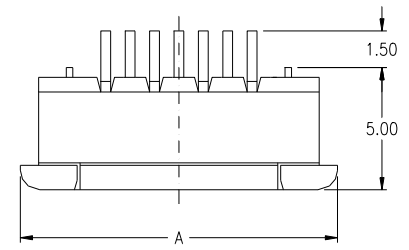

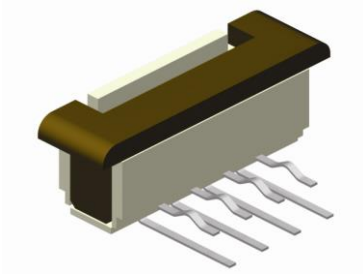

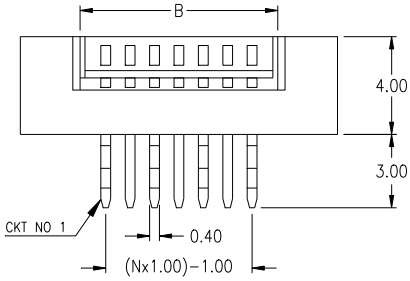

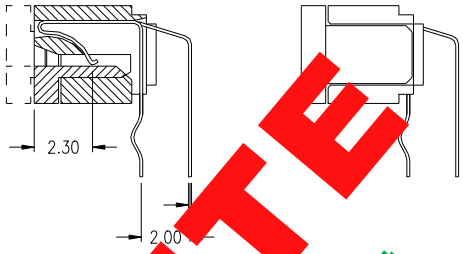

upper contact style 100

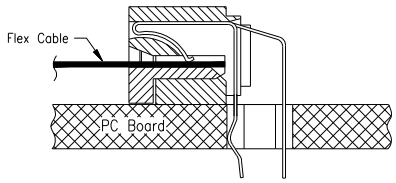

lower contact style 101

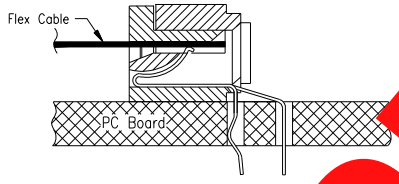

PCB Hole Layout

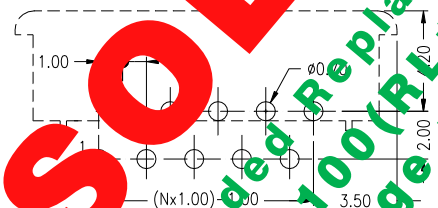

Recommended FPC/FFC dimensions

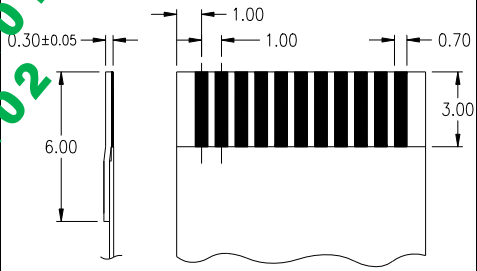

OBSOLETE

Recommended Replacement
FCZ-XXX-RL100(RL101)-99
See Page 102

SPECIFICATIONS

Current rating	0.4 A max.	Operating temperature	- 55°C to +85°C
Insulator resistance	50 MΩ min.	Contact material *(RoHS compliant)*	Phosphor Bronze
Contact resistance	30 mΩ max.	Contact plating	Tin *(leadfree)*
Withstanding voltage	250 V AC/1 Min.	Insulator material *(RoHS compliant)*	Nylon UL 94 V-0

Dimensions (mm)

Contacts	DIM "A"	DIM "B"	Contacts	DIM "A"	DIM "B"	Contacts	DIM "A"	DIM "B"	Contacts	DIM "A"	DIM "B"
004	10.00	5.20	**012**	18.00	13.20	**020**	26.00	21.20	**028**	34.00	29.20
005	11.00	6.20	**013**	19.00	14.20	**021**	27.00	22.20	**029**	35.00	30.20
006	12.00	7.20	**014**	20.00	15.20	**022**	28.00	23.20	**030**	36.00	31.20
007	13.00	8.20	**015**	21.00	16.20	**023**	29.00	24.20	**031**	37.00	32.20
008	14.00	9.20	**016**	22.00	17.20	**024**	30.00	25.20	**032**	38.00	33.20
009	15.00	10.20	**017**	23.00	18.20	**025**	31.00	26.20			
010	16.00	11.20	**018**	24.00	19.20	**026**	32.00	27.20			
011	17.00	12.20	**019**	25.00	20.20	**027**	33.00	28.20			

How to order

FCZ - xxx - R xxx - 99

Nbr of contacts	Contact style	Plating
004 to **032**	**100** = upper **101** = lower	**99** = tin *(leadfree)*

FPC/FFC Connector **ZIF** Type

- THT - 1.00mm pitch right angle

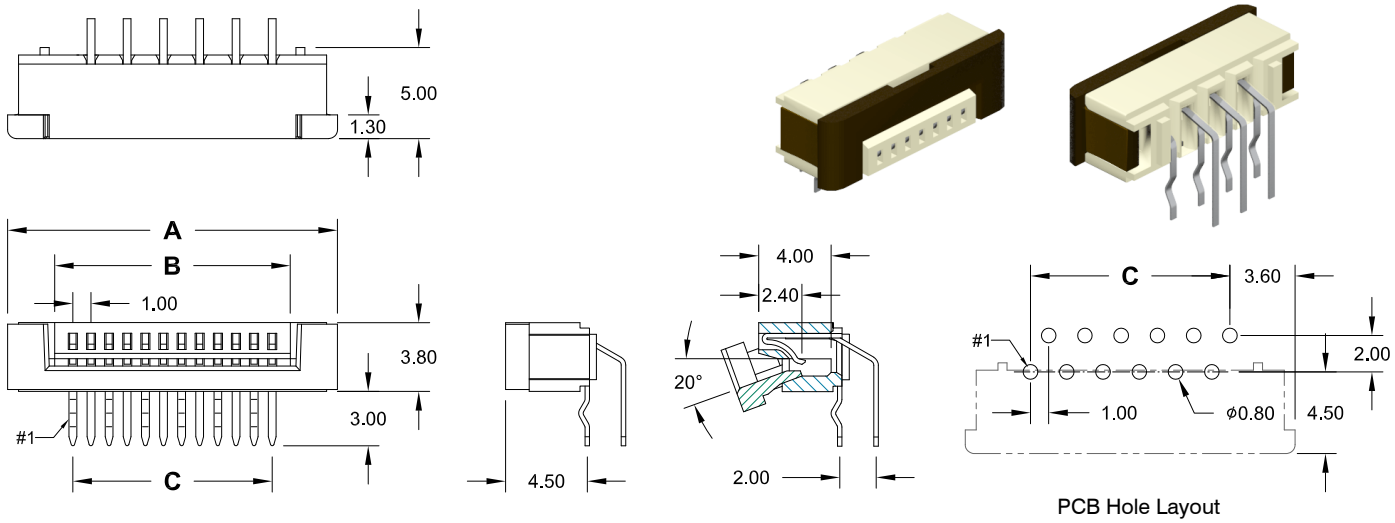

upper contact Style 100

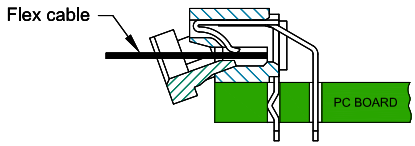

lower contact Style 101

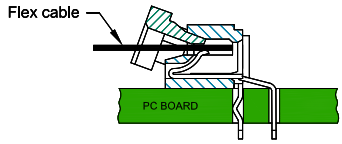

Recommended FPC/FFC dimensions

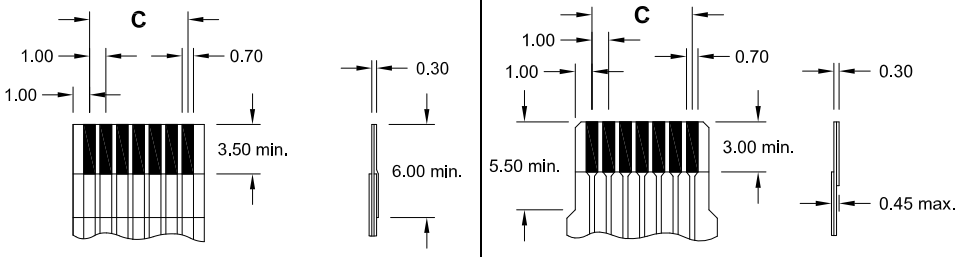

Specifications

Current rating	0.5 A max.	Operating temperature	- 20°C to +85°C
Insulation resistance	500 MΩ min.	Contact material *(RoHS compliant)*	Phosphor Bronze
Contact resistance	30 mΩ max.	Contact plating	Tin *(leadfree)*
Withstanding voltage	500 V AC	Insulator material *(RoHS compliant)*	PA6T (nature) UL 94 V-0
		Actuator material *(RoHS compliant)*	PA6T (brown) UL 94 V-0

Dimensions (mm)

Contacts	DIM "A"	DIM "B"	DIM "C"	Contacts	DIM "A"	DIM "B"	DIM "C"	Contacts	DIM "A"	DIM "B"	DIM "C"	Contacts	DIM "A"	DIM "B"	DIM "C"
004	10.20	5.10	3.00	**012**	18.20	13.10	11.00	**020**	26.20	21.10	19.00	**028**	34.20	29.10	27.00
005	11.20	6.10	4.00	**013**	19.20	14.10	12.00	**021**	27.20	22.10	20.00	**029**	35.20	30.10	28.00
006	12.20	7.10	5.00	**014**	20.20	15.10	13.00	**022**	28.20	23.10	21.00	**030**	36.20	31.10	29.00
007	13.20	8.10	6.00	**015**	21.20	16.10	14.00	**023**	29.20	24.10	22.00	**031**	37.20	32.10	30.00
008	14.20	9.10	7.00	**016**	22.20	17.10	15.00	**024**	30.20	25.10	23.00	**032**	38.20	33.10	31.00
009	15.20	10.10	8.00	**017**	23.20	18.10	16.00	**025**	31.20	26.10	24.00				
010	16.20	11.10	9.00	**018**	24.20	19.10	17.00	**026**	32.20	27.10	25.00				
011	17.20	12.10	10.00	**019**	25.20	20.10	18.00	**027**	33.20	28.10	26.00				

How to order

FCZ - xxx - RL xxx - 99

Nbr of contacts	Contact Style	Plating
004 to **032**	**100** = upper **101** = lower	**99** = Tin *(leadfree)*

FPC/FFC Connector **LIF** Type

- SMT - 1.00mm pitch vertical

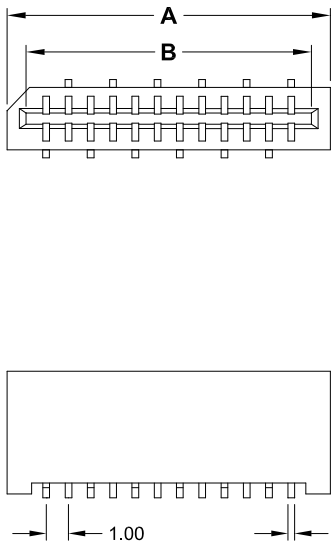

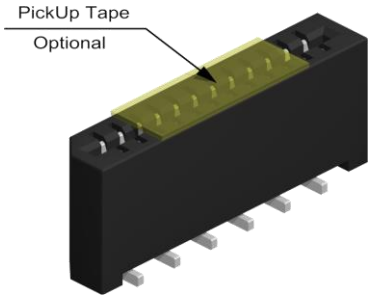

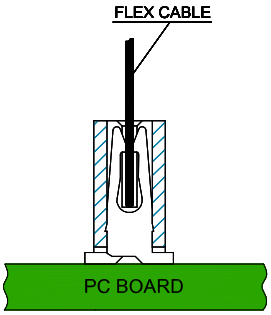

PCB Surface Mount Layout

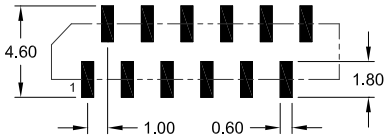

Recommended FPC/FFC dimensions

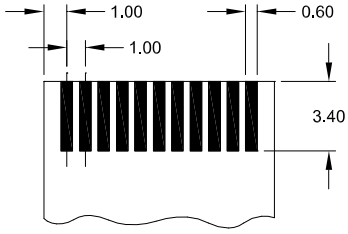

thickness 0.30mm±0.05

Specifications

Current rating	0.5 A max.	Operating temperature	- 20°C to +85°C
Insulation resistance	500 MΩ min.	Processing temperature	+250°C +0/-5°C for 3sec.
Contact resistance	30 mΩ max.	Contact material *(RoHS compliant)*	Phosphor Bronze
Withstanding voltage	500 V AC	Contact plating	Tin *(leadfree)*
		Insulator material *(RoHS compliant)*	PA9T (black) UL 94 V-0

Dimensions (mm)

Contacts	DIM "A"	DIM "B"	Contacts	DIM "A"	DIM "B"	Contacts	DIM "A"	DIM "B"	Contacts	DIM "A"	DIM "B"
003	6.00	4.10	**012**	15.00	13.10	**021**	24.00	22.10	**030**	33.00	31.10
004	7.00	5.10	**013**	16.00	14.10	**022**	25.00	23.10			
005	8.00	6.10	**014**	17.00	15.10	**023**	26.00	24.10			
006	9.00	7.10	**015**	18.00	16.10	**024**	27.00	25.10			
007	10.00	8.10	**016**	19.00	17.10	**025**	28.00	26.10			
008	11.00	9.10	**017**	20.00	18.10	**026**	29.00	27.10			
009	12.00	10.10	**018**	21.00	19.10	**027**	30.00	28.10			
010	13.00	11.10	**019**	22.00	20.10	**028**	31.00	29.10			
011	14.00	12.10	**020**	23.00	21.10	**029**	32.00	30.10			

How to order

FCL - xxx - V100 - 99 /XX

Nbr of contacts	Plating	Option
003 to **030**	**99** = Tin *(leadfree)*	**/RT** connector with "PickUp Tape" and Reel packing (Reel packing QTY. on request)

FPC/FFC Connector **LIF** Type

- SMT - 1.00mm pitch horizontal

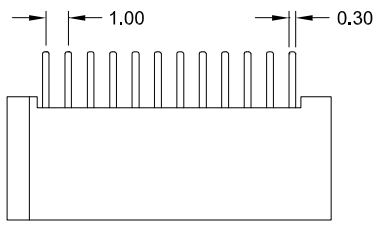

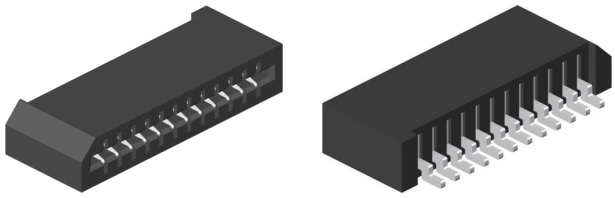

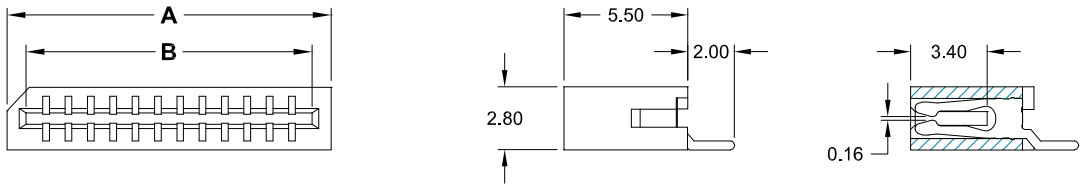

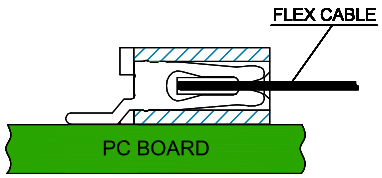

PCB Surface Mount Layout

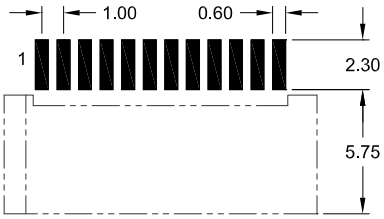

Recommended FPC/FFC dimensions

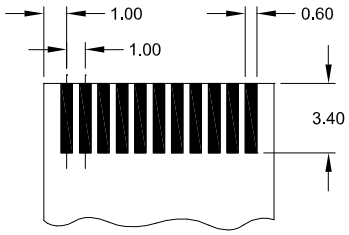

thickness 0.30mm±0.05

Specifications

Current rating	0.5 A max.	Operating temperature	- 20°C to +85°C
Insulation resistance	500 MΩ min.	Processing temperature	+250°C +0/-5°C for 3sec.
Contact resistance	30 mΩ max.	Contact material *(RoHS compliant)*	Phosphor Bronze
Withstanding voltage	500 V AC	Contact plating	Tin *(leadfree)*
		Insulator material *(RoHS compliant)*	PA9T (black) UL 94 V-0

Dimensions (mm)

Contacts	DIM "A"	DIM "B"	Contacts	DIM "A"	DIM "B"	Contacts	DIM "A"	DIM "B"	Contacts	DIM "A"	DIM "B"
003	6.00	4.10	**012**	15.00	13.10	**021**	24.00	22.10	**030**	33.00	31.10
004	7.00	5.10	**013**	16.00	14.10	**022**	25.00	23.10			
005	8.00	6.10	**014**	17.00	15.10	**023**	26.00	24.10			
006	9.00	7.10	**015**	18.00	16.10	**024**	27.00	25.10			
007	10.00	8.10	**016**	19.00	17.10	**025**	28.00	26.10			
008	11.00	9.10	**017**	20.00	18.10	**026**	29.00	27.10			
009	12.00	10.10	**018**	21.00	19.10	**027**	30.00	28.10			
010	13.00	11.10	**019**	22.00	20.10	**028**	31.00	29.10			
011	14.00	12.10	**020**	23.00	21.10	**029**	32.00	30.10			

How to order

FCL - xxx - H100 - 99 /X

Nbr of contacts	Plating	Packing
003 to **030**	**99** = Tin *(leadfree)*	**No suffix** = Tube *(standard)* **/R** = Reel (Reel & Tube packing qty. on request)

FPC/FFC Connector **LIF** Type

- THT - 1.00mm pitch vertical

RoHS compliant

E-tec Interconnect

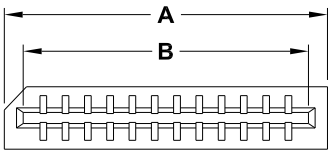

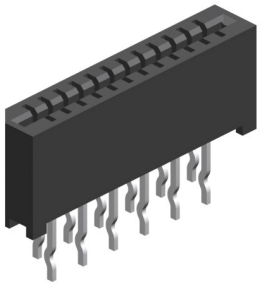

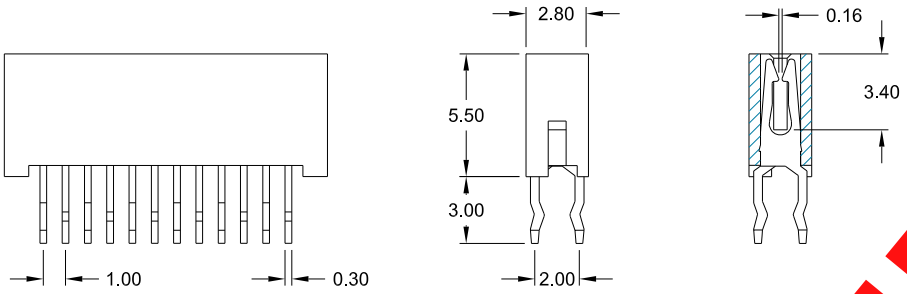

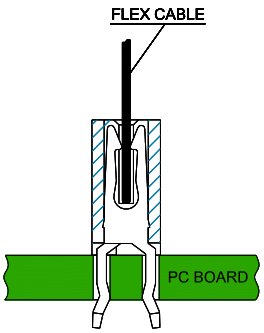

PCB Hole Layout

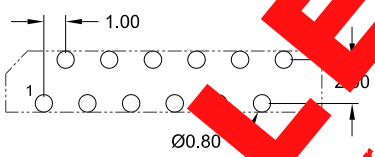

Recommended FPC/FFC dimensions

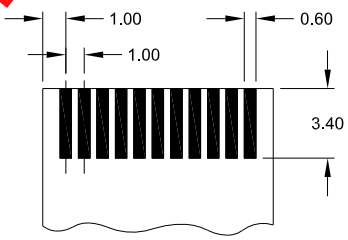

thickness 0.30mm±0.05

OBSOLETE
For replacement pls. contact your nearest E-tec office

Specifications

Current rating	0 max.	Operating temperature	- 20°C to +85°C
Insulation resistance	00 MΩ min.	Contact material *(RoHS compliant)*	Phosphor Bronze
Contact resistance	Ω max.	Contact plating	Tin *(leadfree)*
Withstanding voltage	500 V AC	Insulator material *(RoHS compliant)*	PA9T (black) UL 94 V-0

Dimensions (mm)

Contacts	DIM "A"	DIM "B"	Contacts	DIM "A"	DIM "B"	Contacts	DIM "A"	DIM "B"	Contacts	DIM "A"	DIM "B"
003	6.00	4.10	**012**	15.00	13.10	**021**	24.00	22.10	**030**	33.00	31.10
004	7.00	5.10	**013**	16.00	14.10	**022**	25.00	23.10	**031**	34.00	32.10
005	8.00	6.10	**014**	17.00	15.10	**023**	26.00	24.10	**032**	35.00	33.10
006	9.00	7.10	**015**	18.00	16.10	**024**	27.00	25.10			
007	10.00	8.10	**016**	19.00	17.10	**025**	28.00	26.10			
008	11.00	9.10	**017**	20.00	18.10	**026**	29.00	27.10			
009	12.00	10.10	**018**	21.00	19.10	**027**	30.00	28.10			
010	13.00	11.10	**019**	22.00	20.10	**028**	31.00	29.10			
011	14.00	12.10	**020**	23.00	21.10	**029**	32.00	30.10			

How to order

FCL - xxx - S100 - 99

Nbr of contacts
003 to **032**

Plating
99 = Tin *(leadfree)*

FPC/FFC Connector **LIF** Type

- THT - 1.00mm pitch right angle

RoHS compliant

E-tec Interconnect

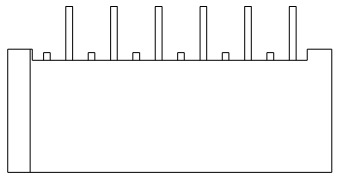

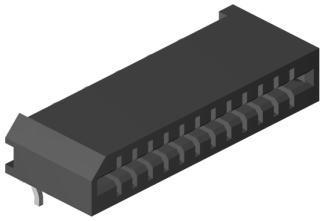

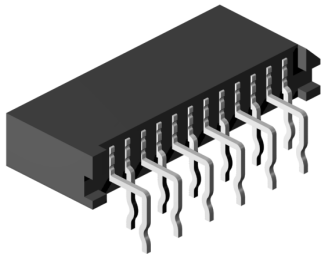

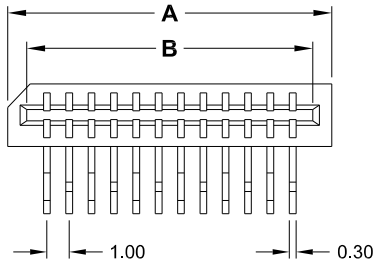

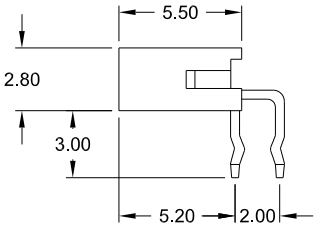

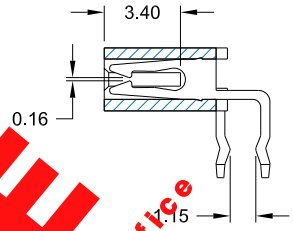

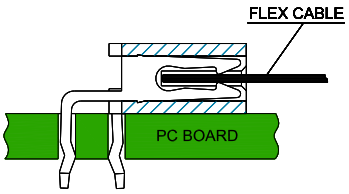

PCB Hole Layout

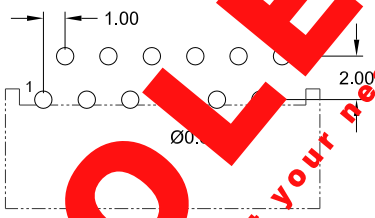

Recommended FPC/FFC dimensions

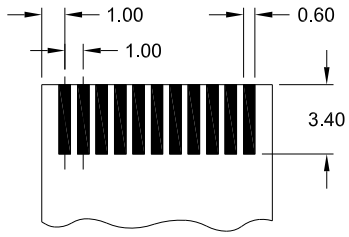

thickness 0.30mm±0.05

OBSOLETE
For replacement pls contact your nearest E-tec office

Specifications

Current rating	A max.	Operating temperature	- 20°C to +85°C
Insulation resistance	50 MΩ min.	Contact material *(RoHS compliant)*	Phosphor Bronze
Contact resistance	mΩ max.	Contact plating	Tin *(leadfree)*
Withstanding voltage	500 V AC	Insulator material *(RoHS compliant)*	PA9T (black) UL 94 V-0

Dimensions (mm)

Contacts	DIM "A"	DIM "B"	Contacts	DIM "A"	DIM "B"	Contacts	DIM "A"	DIM "B"	Contacts	DIM "A"	DIM "B"
003	6.00	4.10	**012**	15.00	13.10	**021**	24.00	22.10	**030**	33.00	31.10
004	7.00	5.10	**013**	16.00	14.10	**022**	25.00	23.10			
005	8.00	6.10	**014**	17.00	15.10	**023**	26.00	24.10			
006	9.00	7.10	**015**	18.00	16.10	**024**	27.00	25.10			
007	10.00	8.10	**016**	19.00	17.10	**025**	28.00	26.10			
008	11.00	9.10	**017**	20.00	18.10	**026**	29.00	27.10			
009	12.00	10.10	**018**	21.00	19.10	**027**	30.00	28.10			
010	13.00	11.10	**019**	22.00	20.10	**028**	31.00	29.10			
011	14.00	12.10	**020**	23.00	21.10	**029**	32.00	30.10			

How to order

FCL - xxx - R100 - 99

Nbr of contacts
003 to **030**

Plating
99 = Tin *(leadfree)*

FPC/FFC Connector **LIF** Type

- SMT - 1.25mm pitch horizontal

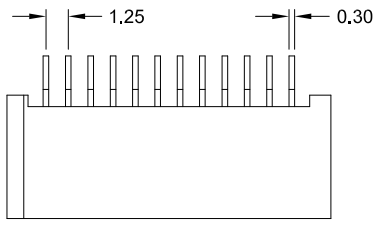

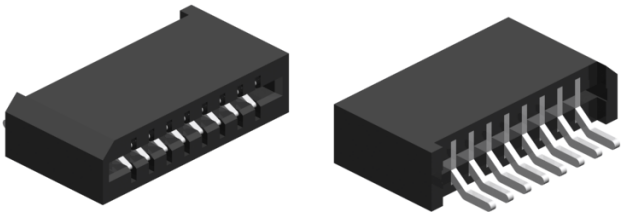

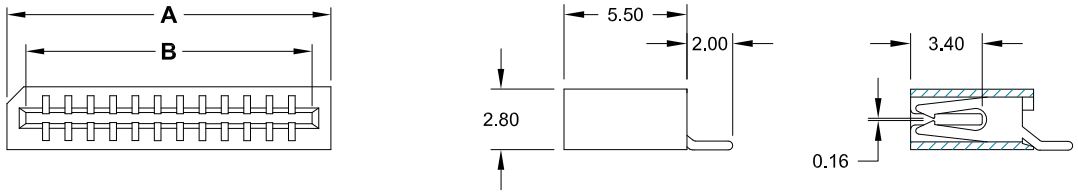

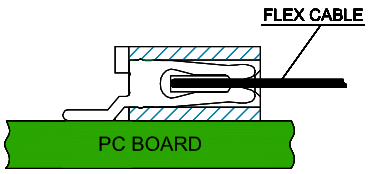

PCB Surface Mount Layout

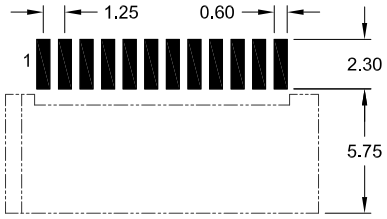

Recommended FPC/FFC dimensions

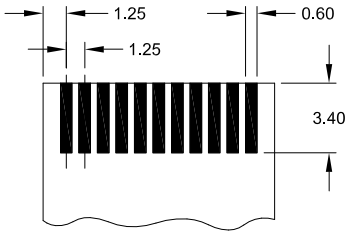

thickness 0.30mm±0.05

Specifications

Current rating	0.5 A max.	Operating temperature	- 20°C to +85°C
Insulation resistance	500 MΩ min.	Processing temperature	+250°C +0/-5°C for 3sec.
Contact resistance	30 mΩ max.	Contact material *(RoHS compliant)*	Phosphor Bronze
Withstanding voltage	500 V AC	Contact plating	Tin *(leadfree)*
		Insulator material *(RoHS compliant)*	PA9T (black) UL 94 V-0

Dimensions (mm)

Contacts	DIM "A"	DIM "B"	Contacts	DIM "A"	DIM "B"	Contacts	DIM "A"	DIM "B"	Contacts	DIM "A"	DIM "B"
003	7.15	5.10	**012**	18.40	16.35	**021**	29.65	27.60	**030**	40.90	38.85
004	8.40	6.35	**013**	19.65	17.60	**022**	30.90	28.85			
005	9.65	7.60	**014**	20.90	18.85	**023**	32.15	30.10			
006	10.90	8.85	**015**	22.15	20.10	**024**	33.40	31.35			
007	12.15	10.10	**016**	23.40	21.35	**025**	34.65	32.60			
008	13.40	11.35	**017**	24.65	22.60	**026**	35.90	33.85			
009	14.65	12.60	**018**	25.90	23.85	**027**	37.15	35.10			
010	15.90	13.85	**019**	27.15	25.10	**028**	38.40	36.35			
011	17.50	15.10	**020**	28.40	26.35	**029**	39.65	37.60			

How to order

FCL - xxx - H125 - 99 /X

Nbr of contacts	Plating	Packing
003 to **030**	**99** = Tin *(leadfree)*	**No suffix** = Tube *(standard)* **/R** = Reel (Reel packing qty. on request)

FPC/FFC Connector **LIF** Type

- THT - 1.25mm pitch vertical

RoHS compliant

E-tec Interconnect

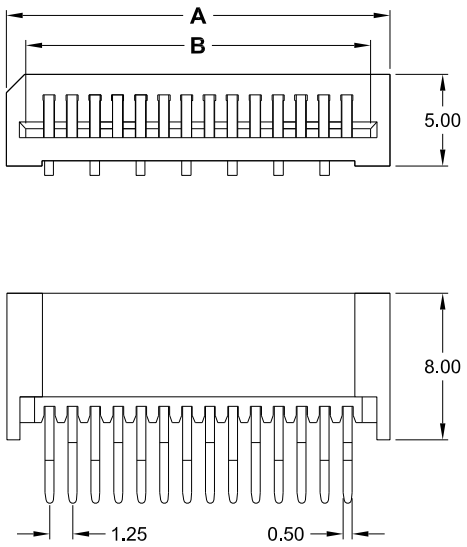

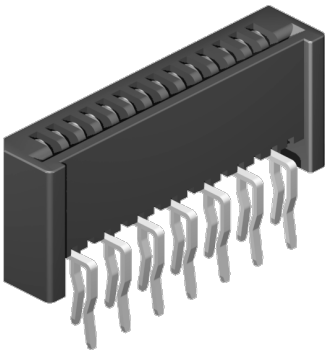

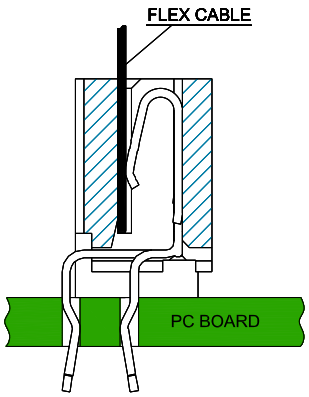

PCB Hole Layout

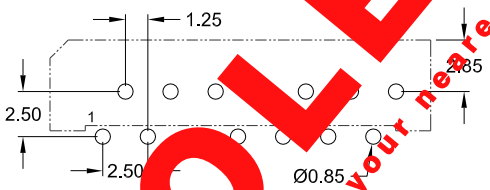

Recommended FPC/FFC dimensions

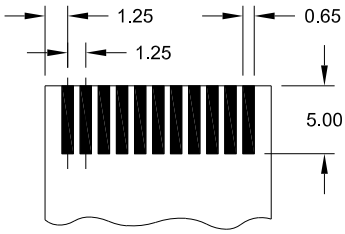

thickness 0.30mm±0.05

OBSOLETE
For replacement pls. contact your nearest E-tec office

Specifications

Current rating	5 A max.	Operating temperature	- 20°C to +85°C
Insulation resistance	MΩ min.	Contact material *(RoHS compliant)*	Phosphor Bronze
Contact resistance	30 mΩ max.	Contact plating	Tin *(leadfree)*
Withstanding voltage	500 VAC	Insulator material *(RoHS compliant)*	PA9T (black) UL 94 V-0

Dimensions (mm)

Contacts	DIM "A"	DIM "B"	Contacts	DIM "A"	DIM "B"	Contacts	DIM "A"	DIM "B"	Contacts	DIM "A"	DIM "B"
004	8.40	6.30	**013**	19.65	17.55	**022**	30.90	28.80	**031**	42.15	40.05
005	9.65	7.55	**014**	20.90	18.80	**023**	32.15	30.05	**032**	43.40	41.30
006	10.90	8.80	**015**	22.15	20.05	**024**	33.40	31.30	**033**	44.65	42.55
007	12.15	10.05	**016**	23.40	21.30	**025**	34.65	32.55	**034**	45,90	43,80
008	13.40	11.30	**017**	24.65	22.55	**026**	35.90	33.80	**035**	47,15	45,05
009	14.65	12.55	**018**	25.90	23.80	**027**	37.15	35.05			
010	15.90	13.80	**019**	27.15	25.05	**028**	38.40	36.30			
011	17.50	15.05	**020**	28.40	26.30	**029**	39.65	37.55			
012	18.40	16.30	**021**	29.65	27.55	**030**	40.90	38.80			

How to order

FCL - xxx - S125 - 99

Nbr of contacts	Plating
004 to **035**	**99** = Tin *(leadfree)*

FPC/FFC Connector **LIF** Type

- THT - 1.25mm pitch right angle

RoHS compliant

E-tec Interconnect

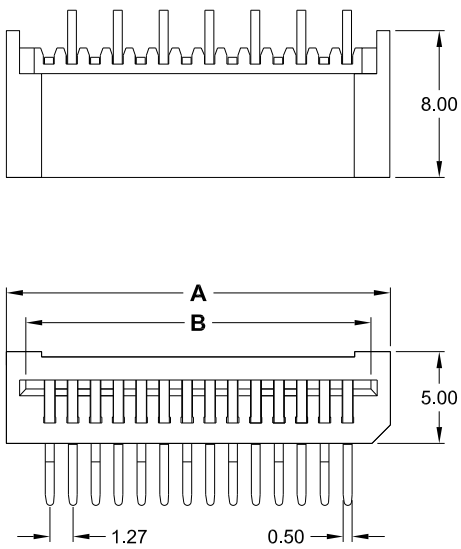

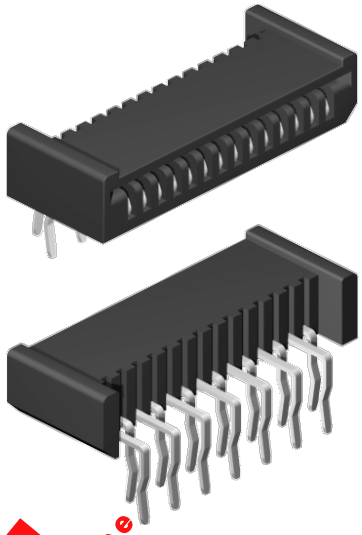

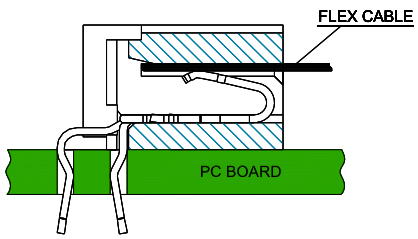

PCB Hole Layo

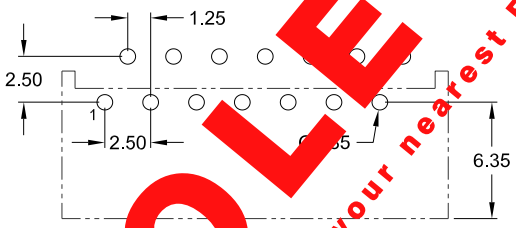

Recommended FPC/FFC dimensions

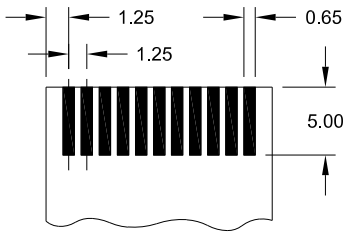

thickness 0.30mm±0.05

OBSOLETE
for replacement pls contact your nearest E-tec office

Specifications

Current rating	A max.	Operating temperature	- 20°C to +85°C
Insulation resistance	5 MΩ min.	Contact material *(RoHS compliant)*	Phosphor Bronze
Contact resistance	0 mΩ max.	Contact plating	Tin *(leadfree)*
Withstanding voltage	500 VAC	Insulator material *(RoHS compliant)*	PA9T (black) UL 94 V-0

Dimensions (mm)

Contacts	DIM "A"	DIM "B"	Contacts	DIM "A"	DIM "B"	Contacts	DIM "A"	DIM "B"	Contacts	DIM "A"	DIM "B"
004	8.40	6.30	**013**	19.65	17.55	**022**	30.90	28.80	**031**	42.15	40.05
005	9.65	7.55	**014**	20.90	18.80	**023**	32.15	30.05	**032**	43.40	41.30
006	10.90	8.80	**015**	22.15	20.05	**024**	33.40	31.30	**033**	44.65	42.55
007	12.15	10.05	**016**	23.40	21.30	**025**	34.65	32.55	**034**	45,90	43,80
008	13.40	11.30	**017**	24.65	22.55	**026**	35.90	33.80	**035**	47,15	45,05
009	14.65	12.55	**018**	25.90	23.80	**027**	37.15	35.05			
010	15.90	13.80	**019**	27.15	25.05	**028**	38.40	36.30			
011	17.50	15.05	**020**	28.40	26.30	**029**	39.65	37.55			
012	18.40	16.30	**021**	29.65	27.55	**030**	40.90	38.80			

How to order

FCL - xxx - R125 - 99

Nbr of contacts
004 to **035**

Plating
99 = Tin *(leadfree)*

FPC/FFC Connector ZIF Type
- THT - 1.25mm pitch straight & right angle

RoHS compliant

E-tec Interconnect

straight

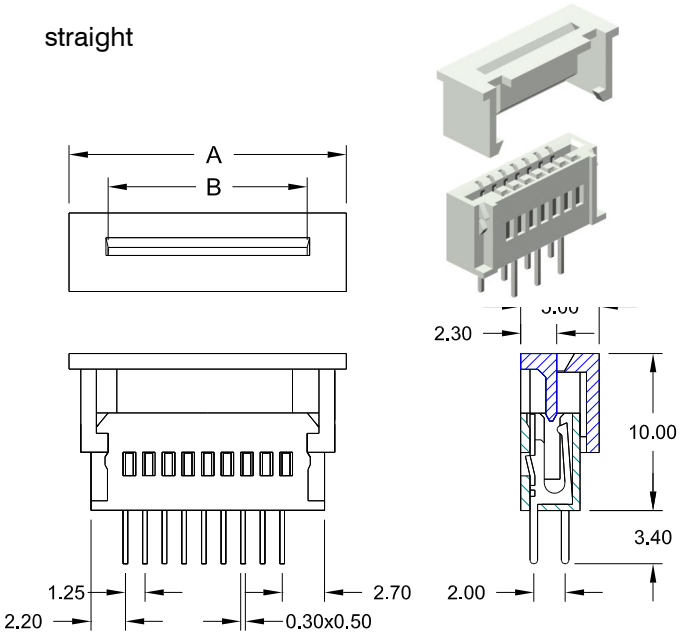

right angle

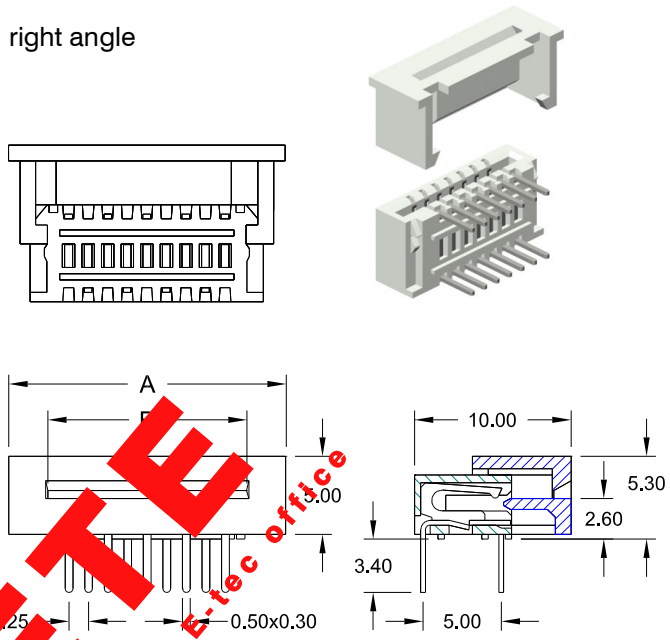

PCB Hole Layout

OBSOLETE
For replacement pls. contact your nearest E-tec office

Specifications

Current rating	1 A max
Insulator resistance	500 MΩ min.
Contact resistance	20 mΩ max
Withstanding voltage	150 V AC
Operating temperature	-20°C to +85°C
Contact material *(RoHS compliant)*	Phosphor Bronze
Contact plating	Tin *(leadfree)*
Insulator material *(RoHS compliant)*	PBT UL 94 V-0

Recommended FPC/FFC dimensions

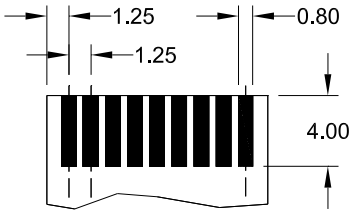

thickness 0.30±0.05

Dimensions (mm)

Contacts	DIM "A"	DIM "B"	Contacts	DIM "A"	DIM "B"	Contacts	DIM "A"	DIM "B"	Contacts	DIM "A"	DIM "B"
003	9.55	5.20	**011**	19.55	15.20	**019**	29.55	25.20	**027**	39.55	35.20
004	10.80	6.45	**012**	20.80	16.45	**020**	30.80	26.45	**028**	40.80	36.45
005	12.05	7.70	**013**	22.05	17.70	**021**	32.05	27.70	**029**	42.05	37.70
006	13.30	8.95	**014**	23.30	18.95	**022**	33.30	28.95	**030**	43.30	38.95
007	14.55	10.20	**015**	24.55	20.20	**023**	34.55	30.20	**031**	44.55	40.20
008	15.80	11.45	**016**	25.80	21.45	**024**	35.80	31.45	**032**	45.80	41.45
009	17.05	12.70	**017**	27.05	22.70	**025**	37.05	32.70			
010	18.30	13.95	**018**	28.30	23.95	**026**	38.30	33.95			

How to order

FCZ - xxx - X 125 - 99

Nbr of contacts	Connector style	Plating
003 to **032**	**S** = straight **R** = right angle	**99** = Tin *(leadfree)*

FPC/FFC Connector **LIF** Type

- THT - 2.54mm pitch vertical

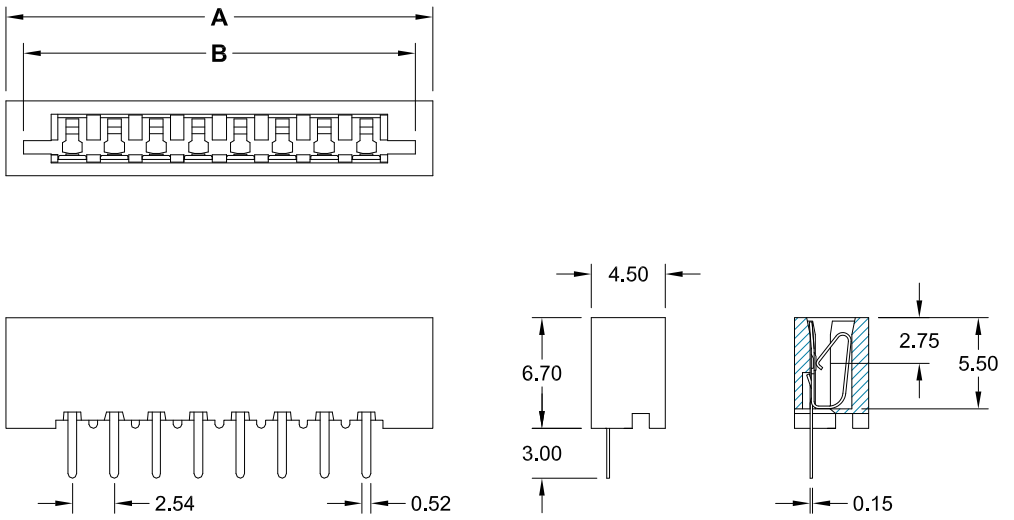

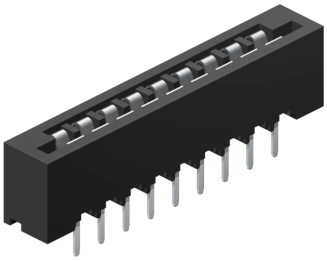

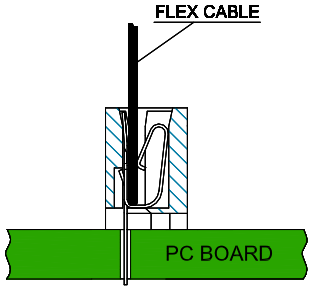

PCB Hole Layout

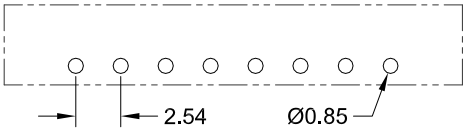

Recommended FPC dimensions

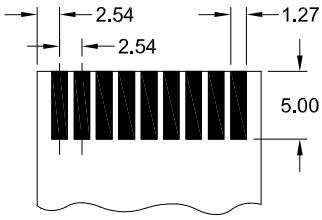

thickness 0.30mm±0.05

Specifications

Current rating	1.0 A max.	Operating temperature	- 20°C to +85°C
Insulation resistance	1000 MΩ min.	Contact material *(RoHS compliant)*	Phosphor Bronze
Contact resistance	30 mΩ max.	Contact plating	Tin *(leadfree)*
Withstanding voltage	500 V AC	Insulator material *(RoHS compliant)*	PA9T (black) UL 94 V-0

Dimensions (mm)

Contacts	DIM "A"	DIM "B"	Contacts	DIM "A"	DIM "B"	Contacts	DIM "A"	DIM "B"	Contacts	DIM "A"	DIM "B"
002	10.54	8.43	**009**	28.32	26.21	**016**	46.10	43.99	**023**	63.88	61.77
003	13.08	10.97	**010**	30.86	28.75	**017**	48.64	46.53	**024**	66.42	64.31
004	15.62	13.51	**011**	33.40	31.29	**018**	51.18	49.07	**025**	68.96	66.85
005	18.16	16.05	**012**	35.94	33.83	**019**	53.72	51.60	**026**	71.50	69.39
006	20.70	18.59	**013**	38.48	36.37	**020**	56.26	54.15			
007	23.24	21.13	**014**	41.02	38.91	**021**	58.80	56.69			
008	25.78	23.67	**015**	43.56	41.45	**022**	61.34	59.23			

How to order

FPC - xxx - S254 - 99

Nbr of contacts
002 to **026**

Plating
99 = Tin *(leadfree)*

FPC/FFC Connector **LIF** Type

- THT - 2.54mm pitch right angle

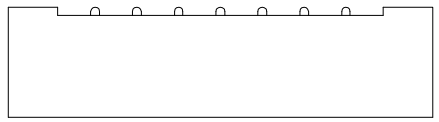

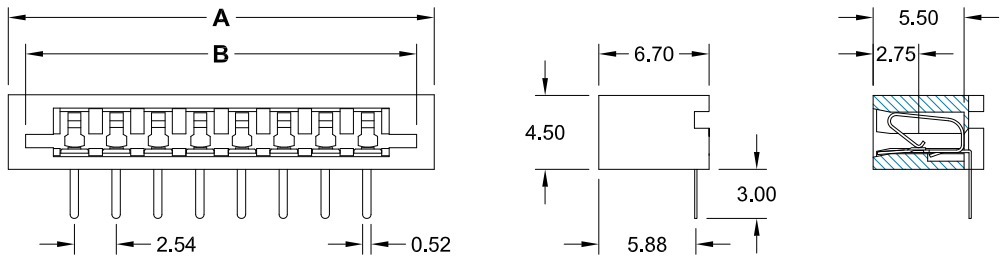

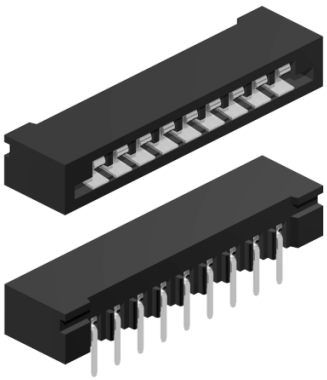

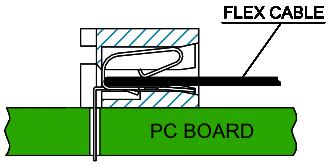

PCB Hole Layout

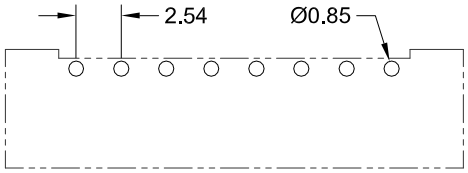

Recommended FPC dimensions

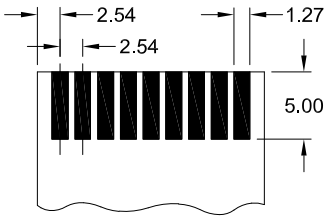

thickness 0.30mm±0.05

Specifications

Current rating	1.0 A max.	Operating temperature	- 20°C to +85°C
Insulation resistance	1000 MΩ min.	Contact material *(RoHS compliant)*	Phosphor Bronze
Contact resistance	30 mΩ max.	Contact plating	Tin *(leadfree)*
Withstanding voltage	500 V AC	Insulator material *(RoHS compliant)*	PA9T (black) UL 94 V-0

Dimensions (mm)

Contacts	DIM "A"	DIM "B"	Contacts	DIM "A"	DIM "B"	Contacts	DIM "A"	DIM "B"	Contacts	DIM "A"	DIM "B"
002	10.54	8.43	**009**	28.32	26.21	**016**	46.10	43.99	**023**	63.88	61.77
003	13.08	10.97	**010**	30.86	28.75	**017**	48.64	46.53	**024**	66.42	64.31
004	15.62	13.51	**011**	33.40	31.29	**018**	51.18	49.07	**025**	68.96	66.85
005	18.16	16.05	**012**	35.94	33.83	**019**	53.72	51.60	**026**	71.50	69.39
006	20.70	18.59	**013**	38.48	36.37	**020**	56.26	54.15			
007	23.24	21.13	**014**	41.02	38.91	**021**	58.80	56.69			
008	25.78	23.67	**015**	43.56	41.45	**022**	61.34	59.23			

How to order

FPC - xxx - R254 - 99

Nbr of contacts
002 to **026**

Plating
99 = Tin *(leadfree)*

Flex Cable

0.50mm to 2.54mm pitch

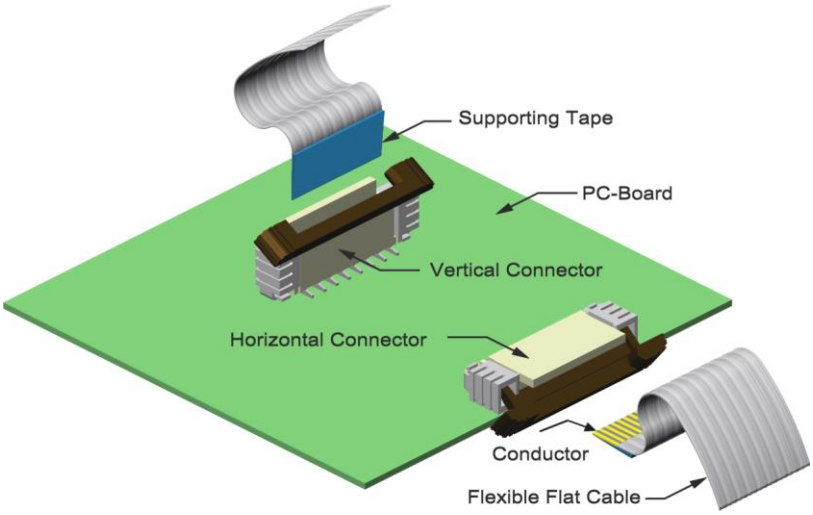

Specifications

Conductor resistance	according to JIS C-C3102 (@ 20°C)	
Insulation resistance (as per MIL-STD-202F Method 302 cond. B)	>1000MΩ/Meter	
Dielectric strength (as per MIL-STD-202 Method 301)	500V AC / Minute	
Voltage rating	up to 2.54mm pitch:	60V AC
Current rating @20°C	0.50mm pitch:	0.4A
	0.80 & 1.00mm pitch:	1.0A
	1.25mm pitch:	1.5A
	2.54mm pitch:	2.0A
Temperature rating	-40°C to +85°C	
Flame Test	UL Sub, 758 VW-1	
Flexing Test		
A) Bending angle: 180°, R=Cable thickness		≧20 cycles
B) R=10.00mm 70 cycle/Minute @23°C		≧100.000 cycles
Abrasion Test following EN3475-503		
Tool: Ø0.50mm, Weight: 600g, Speed: 60 cycle/Min.		≧10.000 cycles
Insulator	Polyester (white)	
Supporting Tape	Polyester (blue)	
Conductor	flat Copper Wire Tin or Gold plated	
Available UL Style:	20624/20798 (others on request)	

Dimensions

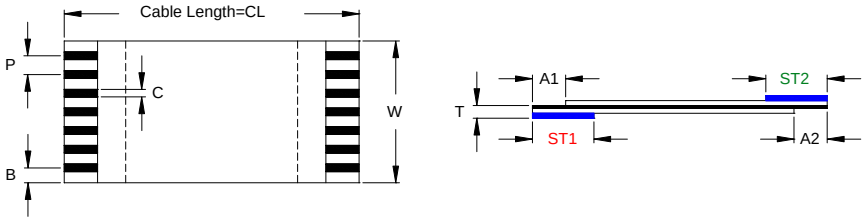

Cable Type

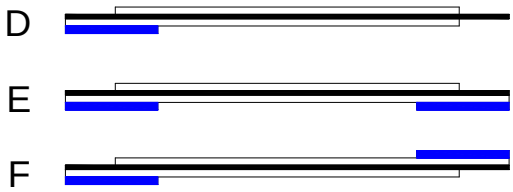

DIM (mm)	"P" (Pitch)	"C"	"B"	"W"	"CL"	"T"	"A1"	"A2"	"ST1" (Supporting Tape)	"ST2" (Supporting Tape)
Range	0.50 - 2.54	0.30 - 0.80	same as "P"	P×(n+1)	20.00 min.	0.30	3.00 - 6.00	3.00 - 6.00	6.00 - 15.00	6.00 - 15.00
Tolerance	±0.05	±0.05	±0.08	±0.10	see ***Note***	±0.05	±1.00	±1.00	±2.00	±2.00

Note: 20 - 100mm ±2.00mm 101 - 200mm ±3.00mm 201 - 300mm ±4.00mm >301mm ±5.00mm

How to order

FCA - x xx - X xxx - 4 4 06 10 - x

Pitch	Nbr of Conductors	Cable Type	Cable length "CL"	Cable End	Conductor plating
1 = 0.50 mm	**04 - 200**	**D**	Example:	Example: **4 4 06 10**	**9** = Tin *(leadfree)*
2 = 0.80 mm	**06 - 100**	**E**	**050** = 50.00mm	**A1 A2 ST1 ST2**	**5** = Gold flash *(on "A1" & "A2" area)*
3 = 1.00 mm	**02 - 100**	**F**	**100** = 100.00mm	4.0 mm 4.0 mm 6.0 mm 10.0 mm	
4 = 1.25 mm	**02 - 84**			**ST2** = **00** if Cable Type "**D**" **blank** if same as **ST1**, if different use code like **ST1**	
7 = 2.54 mm	**03 - 38**				

ZIF Test Sockets for Flex Cable

0.50mm to 2.54mm pitch

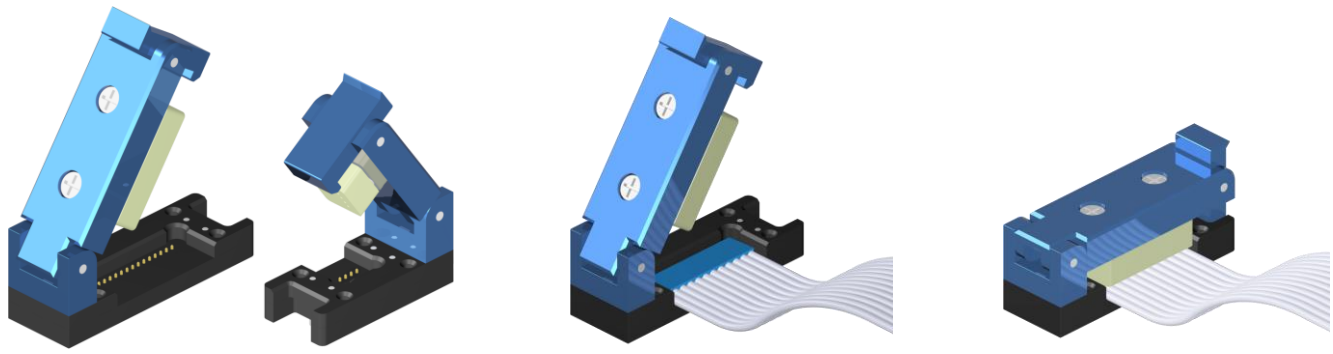

High cycle ZIF Test Sockets for any kind and pitch of Flex-Cable.

Handles up to 10K cycles with simple open/close ClamShell type retention frame.

Cable Dimensions

In order to be able to offer the correct socket for your cable, we need to know the type of cable you are using and the corresponding dimensions as shown below.

Please send the datasheet of your cable together with your socket request.

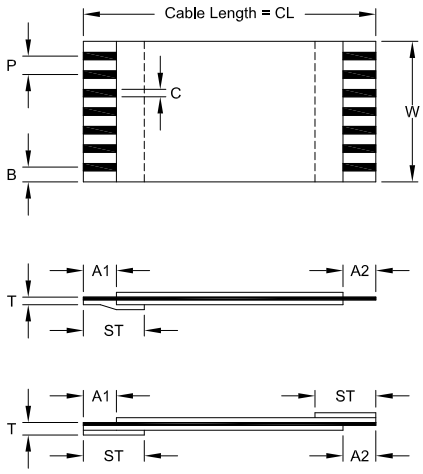

Specifications

Mechanical data

Contact life	10.000 cycles min.
Retention System life	10.000 cycles min.
Solderability	as per IEC 60068-2-58
Individual contact force	40 grams max.

Material

Insulator	*(RoHS compliant)*	High temp plastic or epoxy FR4
Terminal	*(RoHS compliant)*	Brass
Spring	*(RoHS compliant)*	BeCu

Electrical data

Contact resistance	< 100 mΩ
Current rating	500 mA max.
Insulation resistance at 500V DC	100 MΩ if 0.50 to 0.80mm pitch 500 MΩ 1.00mm pitch upwards
Breakdown voltage at 60 Hz	500V min.
Capacitance	< 1 pF
Inductance	< 2 nH

Operating temperature –55°C to +125°C

Processing temperature 260°C for 60sec.

A detailed socket drawing with the required PCB layout dimensions will be submitted by E-tec for each project.

How to order

FCT - x xx - X xxx - xx

Pitch	Nbr of conductors	Socket Type	Execution	Plating
1 = 0.50mm **2** = 0.80mm **3** = 1.00mm **4** = 1.25mm **5** = 1.27mm **6** = 2.00mm **7** = 2.54mm	**02** to **40**	**T** = **THT** (soldertail) **S** = **SMT** (surface mount) **C** = **Compression Type** (solderless)	**000** = Standard *(will be given by the factory)*	**95** = Tin/Gold *(leadfree)* **55** = Gold *only for solderless Compression Type*

Mini – Flex Connector

IDC pitch 1.27mm shrouded male

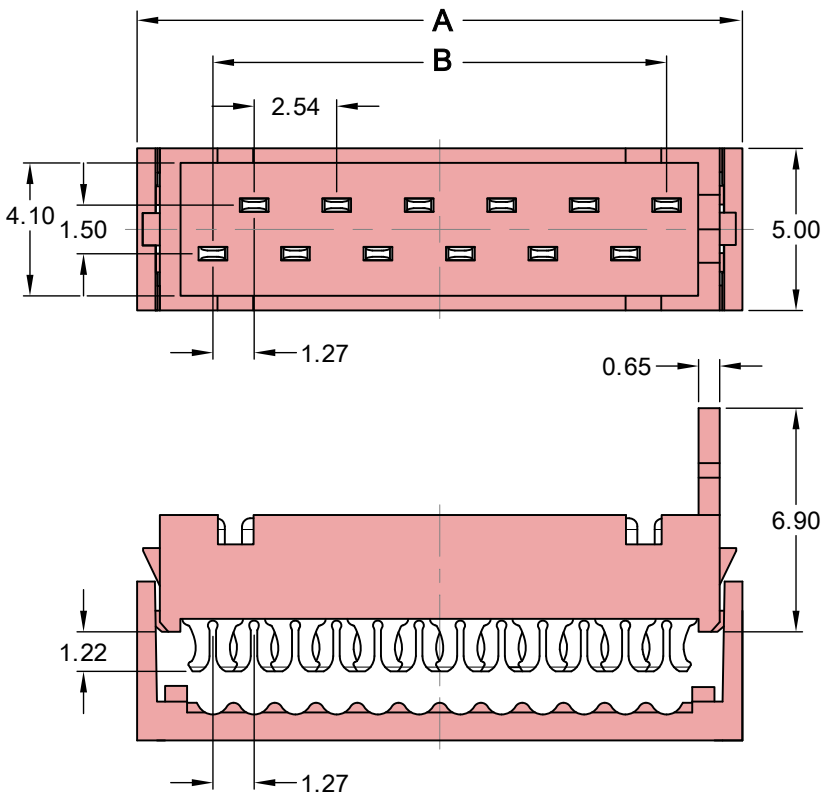

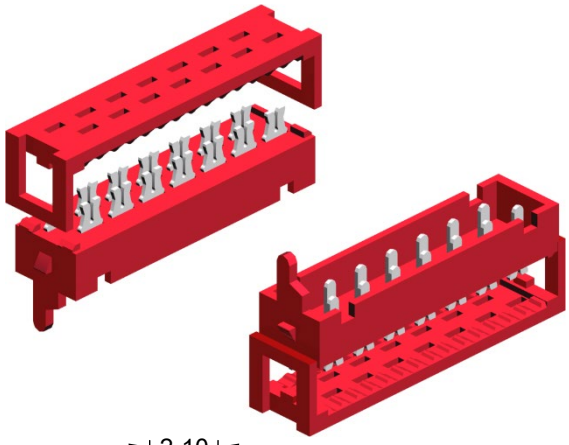

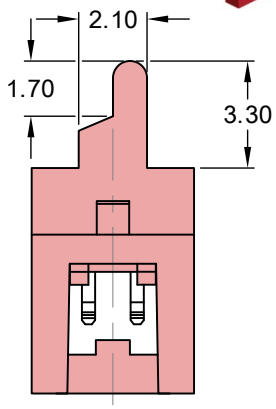

Specifications

Current rating	1.0 A max.
Voltage rating	230 V AC/DC
Withstanding voltage	500 V AC
Contact resistance	20 mΩ max.
Insulation resistance	1000 MΩ min.
Operating temperature	- 40°C to +105°C
Insulator material *(RoHS compliant)*	PBT (red) UL 94 V-0
Contact material *(RoHS compliant)*	Phosphor Bronze

Ribbon Cable Recommendation

Cable Type	Ribbon UL Style 2651
Spacing	1.27mm
Wire range	stranded 0.08 – 0.09 mm² AWG 28
	solid Ø 0.30 mm
Insulation Diameter	0.90 mm

Dimensions (mm)

Contacts	DIM "A"	DIM "B"	Contacts	DIM "A"	DIM "B"	Contacts	DIM "A"	DIM "B"
004	8.45	3.81	**012**	18.61	13.97	**020**	28.77	24.13
006	10.99	6.35	**014**	21.15	16.51	**022**	31.31	25.40
008	13.53	8.89	**016**	23.69	19.05	**024**	33.85	27.94
010	16.07	11.43	**018**	26.23	21.59	**026**	36.39	30.48

How to order

MFM - xxx - DC50 - 99

Nbr of contacts

004; 006; 008; 010
012; 014; 016; 018
020; 022; 024; 026

Plating

99 = Tin *(leadfree)*

other platings on request

Mini – Flex Connector

IDC pitch 1.27mm - THT - Plug

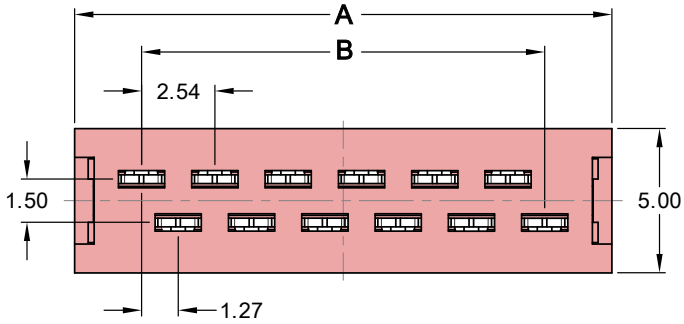

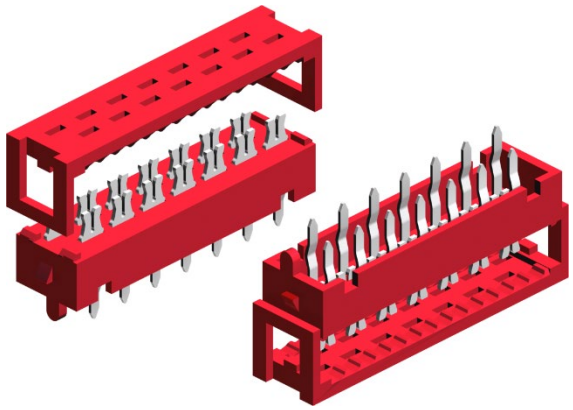

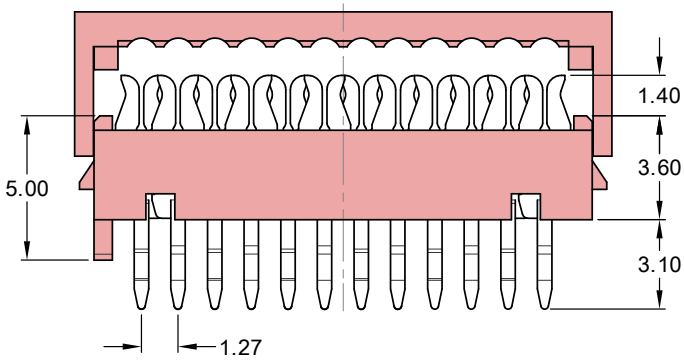

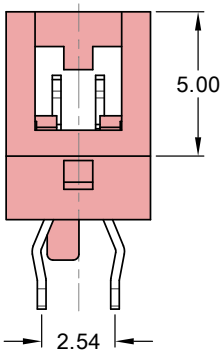

PCB Hole Layout

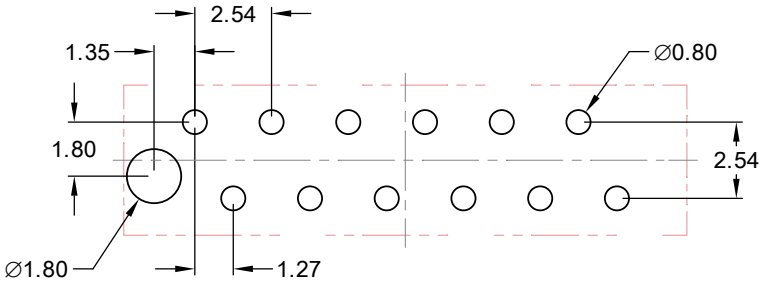

Specifications

Current rating	1.0 A max.
Voltage rating	230 V AC/DC
Withstanding voltage	500 V AC
Contact resistance	20 mΩ max.
Insulation resistance	1000 MΩ min.
Operating temperature	- 40°C to +105°C
Insulator material *(RoHS compliant)*	PBT (red) UL 94 V-0
Contact material *(RoHS compliant)*	Phosphor Bronze

Ribbon Cable Recommendation

Cable Type	Ribbon UL Style 2651
Spacing	1.27mm
Wire range	stranded 0.08 – 0.09 mm² AWG 28
	solid Ø 0.30 mm
Insulation Diameter	0.90 mm

Dimensions (mm)

Contacts	DIM "A"	DIM "B"	Contacts	DIM "A"	DIM "B"	Contacts	DIM "A"	DIM "B"
004	8.45	3.81	**012**	18.61	13.97	**020**	28.77	24.13
006	10.99	6.35	**014**	21.15	16.51	**022**	31.31	26.67
008	13.53	8.89	**016**	23.69	19.05	**024**	33.85	29.21
010	16.07	11.43	**018**	26.23	21.59	**026**	36.39	31.75

How to order

MFP - xxx - DC50 – 99

Nbr of contacts
004; 006; 008; 010 **012; 014; 016; 018** **020; 022; 024; 026**

Plating
99 = Tin *(leadfree)* other platings on request

Mini – Mate Connector

- SMT - female Block Shape

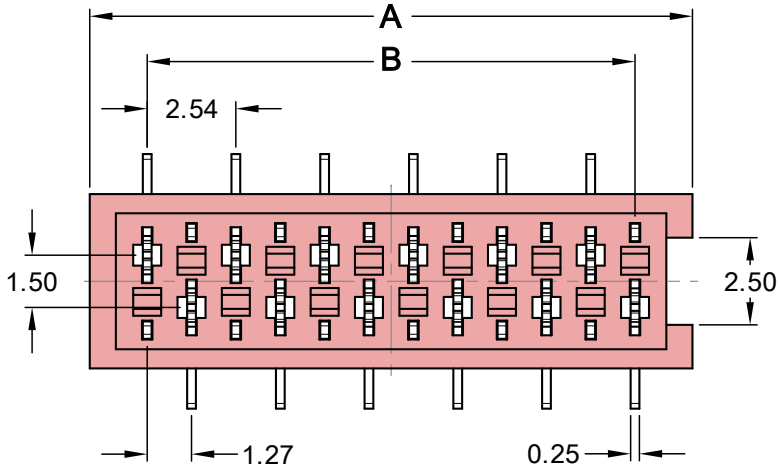

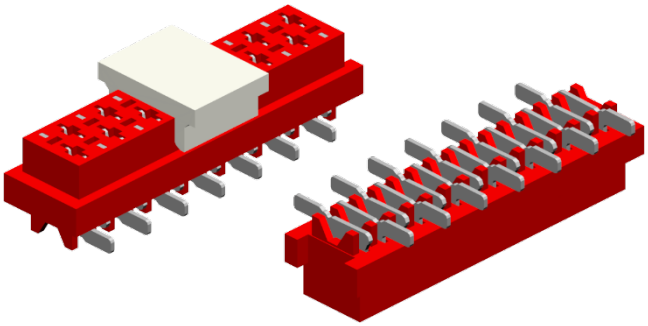

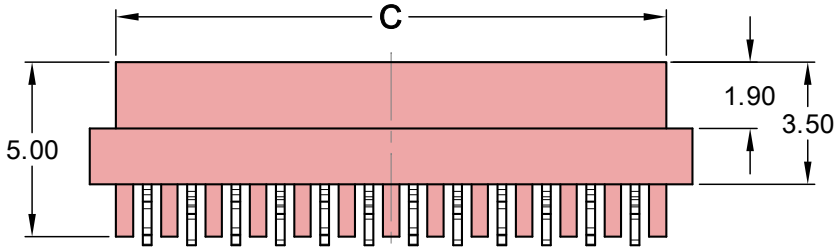

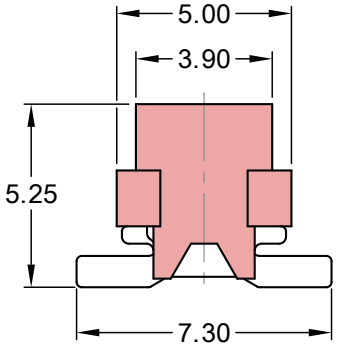

Specifications

Current rating		1.0 A max.
Voltage rating		230 V AC/DC
Withstanding voltage		500 V AC
Contact resistance		20 mΩ max.
Insulation resistance		1000 MΩ min.
Operating temperature		- 40°C to +105°C
Processing temperature		+260°C +0/-5°C for 5 Sec.
Insulator material	*(RoHS compliant)*	PA46 (red) UL 94 V-0
Contact material	*(RoHS compliant)*	Phosphor Bronze

PCB Surface Mount Layout

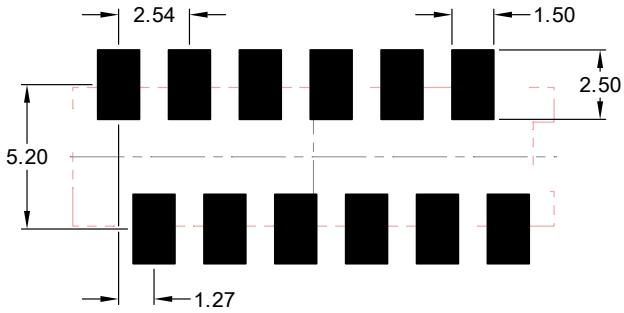

Dimensions (mm)

Contacts	DIM "A"	DIM "B"	DIM "C"	Contacts	DIM "A"	DIM "B"	DIM "C"	Contacts	DIM "A"	DIM "B"	DIM "C"
004	7.00	3.81	5.60	**012**	17.16	13.97	15.76	**020**	27.32	24.13	25.92
006	9.54	6.35	8.14	**014**	19.70	16.51	18.30	**022**	29.86	26.67	28.46
008	12.08	8.89	10.68	**016**	22.24	19.05	20.84	**024**	32.40	29.21	31.00
010	14.62	11.43	13.22	**018**	24.78	21.59	23.38	**026**	34.94	31.75	33.54

How to order

MMF - xxx - HB50 - 99/X

Nbr of contacts	Plating	Option
004; 006; 008; 010 **012; 014; 016; 018** **020; 022; 024; 026**	**99** = Tin *(leadfree)* other platings on request	**A** = Tube packing; with "PickUp Cap" **B** = Reel packing; with "PickUp Cap" **T** = Tube packing; without "PickUp Cap"

Mini – Mate Connector
- SMT - female Latch Shape

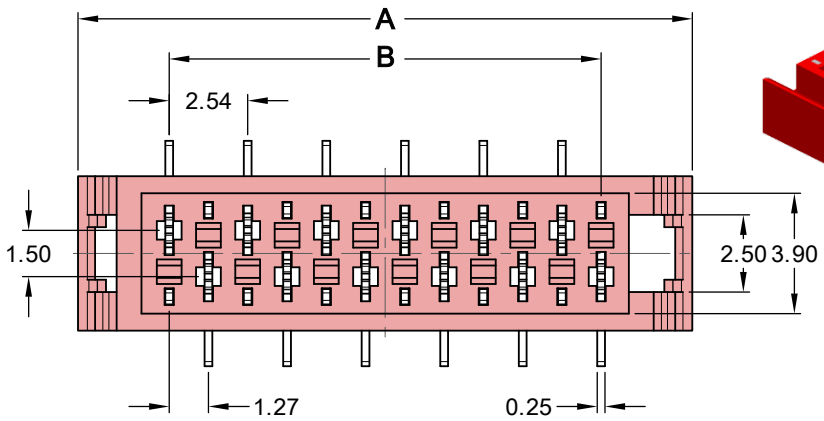

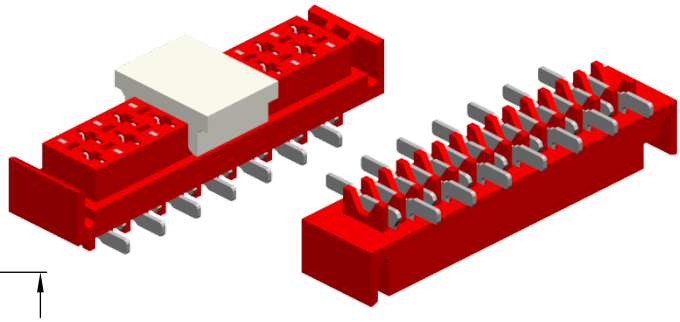

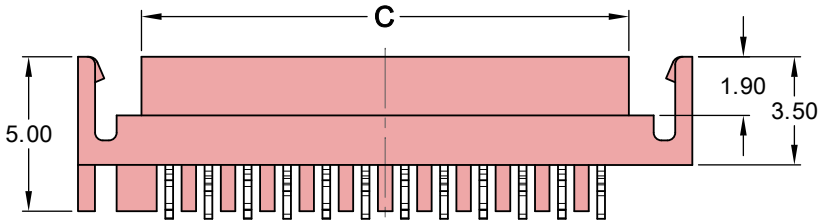

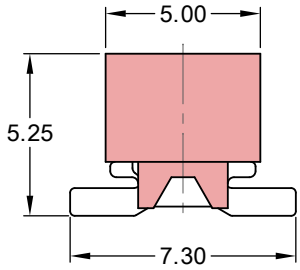

Specifications

Current rating	1.0 A max.
Voltage rating	230 V AC/DC
Withstanding voltage	500 V AC
Contact resistance	20 mΩ max.
Insulation resistance	1000 MΩ min.
Operating temperature	- 40°C to +105°C
Processing temperature	+260°C +0/-5°C for 5 Sec.
Insulator material *(RoHS compliant)*	PA46 (red) UL 94 V-0
Contact material *(RoHS compliant)*	Phosphor Bronze

PCB Surface Mount Layout

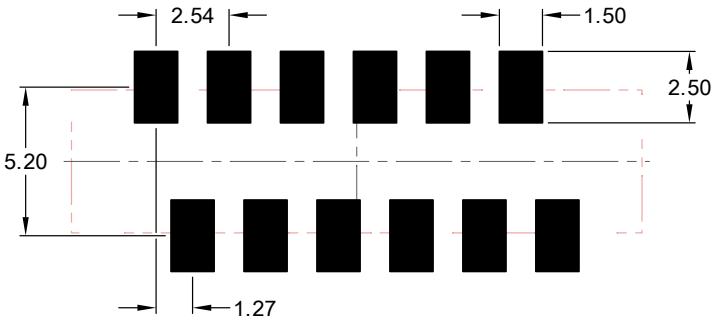

Dimensions (mm)

Contacts	DIM "A"	DIM "B"	DIM "C"	Contacts	DIM "A"	DIM "B"	DIM "C"	Contacts	DIM "A"	DIM "B"	DIM "C"
004	9.70	3.81	5.60	**012**	19.86	13.97	15.76	**020**	30.02	24.13	25.92
006	12.24	6.35	8.14	**014**	22.40	16.51	18.30	**022**	32.56	26.67	28.46
008	14.78	8.89	10.68	**016**	24.94	19.05	20.84	**024**	35.10	29.21	31.00
010	17.32	11.43	13.22	**018**	27.48	21.59	23.38	**026**	37.64	31.75	33.54

How to order

MMF - xxx - HL50 - 99/X

Nbr of contacts	Plating	Option
004; 006; 008; 010 **012; 014; 016; 018** **020; 022; 024; 026**	**99** = Tin *(leadfree)* other platings on request	**A** = Tube packing; with "PickUp Cap" **B** = Reel packing; with "PickUp Cap" **T** = Tube packing; "without PickUp Cap"

Mini – Mate Connector

- THT - straight female Block Shape

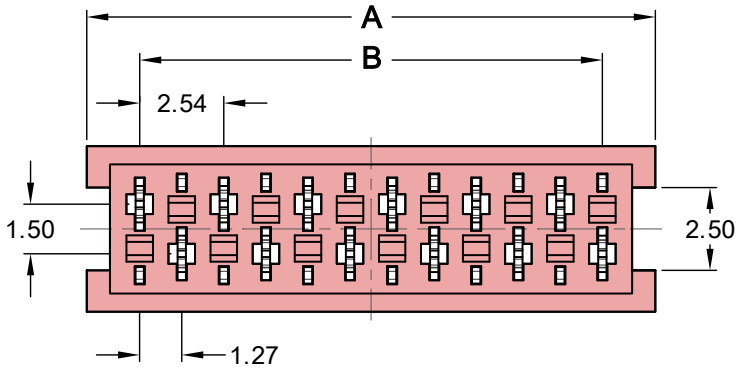

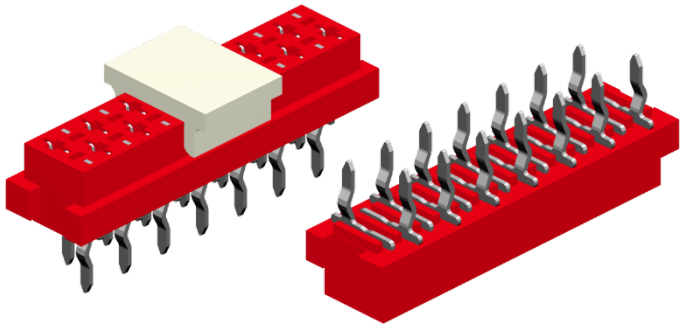

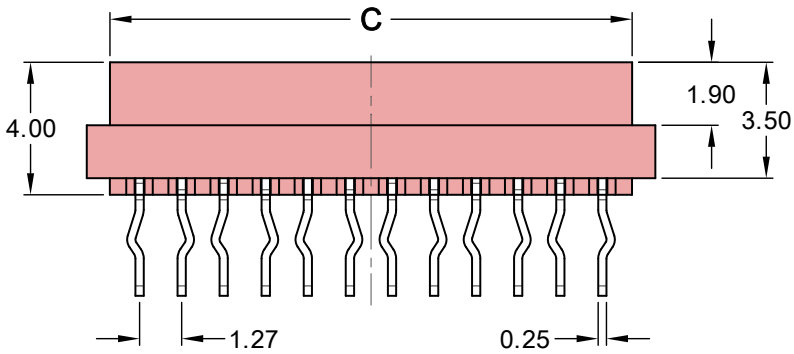

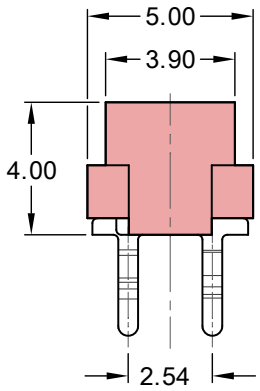

Specifications

Current rating		1.0 A max.
Voltage rating		230 V AC/DC
Withstanding voltage		500 V AC
Contact resistance		20 mΩ max.
Insulation resistance		1000 MΩ min.
Operating temperature		- 40°C to +105°C
Processing temperature		+260°C +0/-5°C for 5 Sec.
Insulator material	*(RoHS compliant)*	PA46 (red) UL 94 V-0
Contact material	*(RoHS compliant)*	Phosphor Bronze

PCB Hole Layout

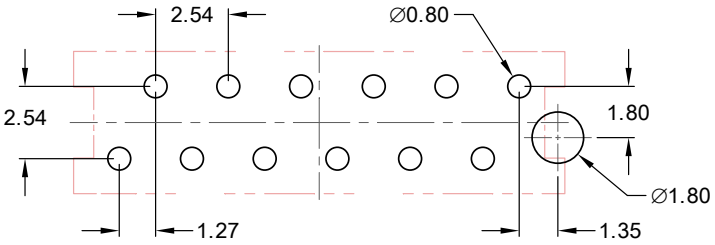

Dimensions (mm)

Contacts	DIM "A"	DIM "B"	DIM "C"	Contacts	DIM "A"	DIM "B"	DIM "C"	Contacts	DIM "A"	DIM "B"	DIM "C"
004	7.00	3.81	5.60	**012**	17.16	13.97	15.76	**020**	27.32	24.13	25.92
006	9.54	6.35	8.14	**014**	19.70	16.51	18.30	**022**	29.86	26.67	28.46
008	12.08	8.89	10.68	**016**	22.24	19.05	20.84	**024**	32.40	29.21	31.00
010	14.62	11.43	13.22	**018**	24.78	21.59	23.38	**026**	34.94	31.75	33.54

How to order

MMF - xxx - SB50 - 99 /X

Nbr of contacts	Plating	Option
004; 006; 008; 010 **012; 014; 016; 018** **020; 022; 024; 026**	**99** = Tin *(leadfree)* other platings on request	**no suffix if** Tube packing; without "PickUp Cap" **/A** = Tube packing; with "PickUp Cap" **/B** = Reel packing; with "PickUp Cap"

Mini – Mate Connector

- THT - straight female Latch Shape

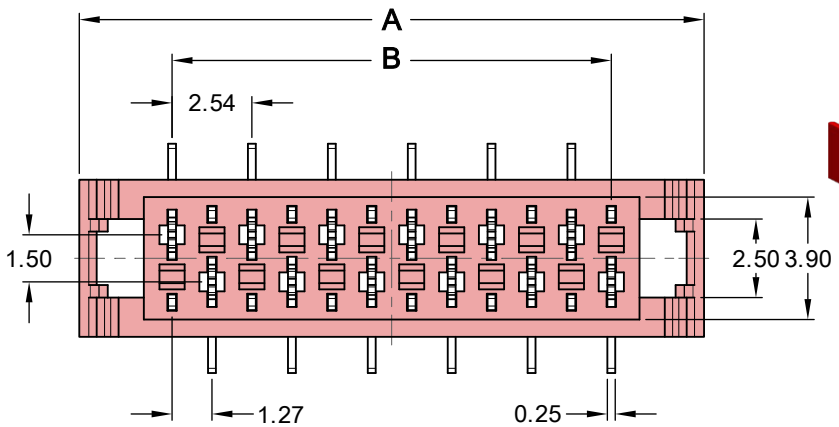

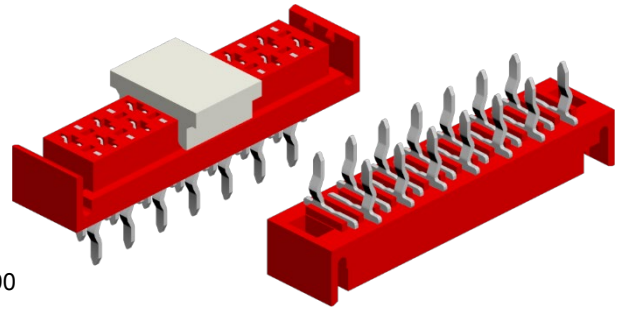

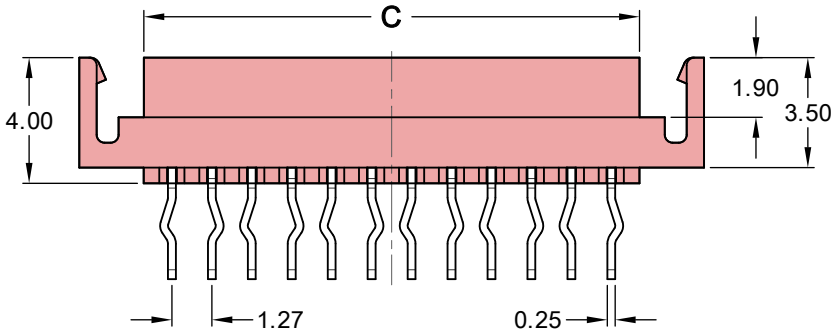

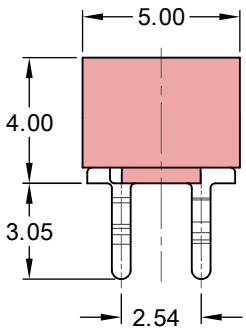

Specifications

Current rating		1.0 A max.
Voltage rating		230 V AC/DC
Withstanding voltage		500 V AC
Contact resistance		20 mΩ max.
Insulation resistance		1000 MΩ min.
Operating temperature		- 40°C to +105°C
Processing temperature		+260°C +0/-5°C for 5 Sec.
Insulator material	*(RoHS compliant)*	PA46 (red) UL 94 V-0
Contact material	*(RoHS compliant)*	Phosphor Bronze

PCB Hole Layout

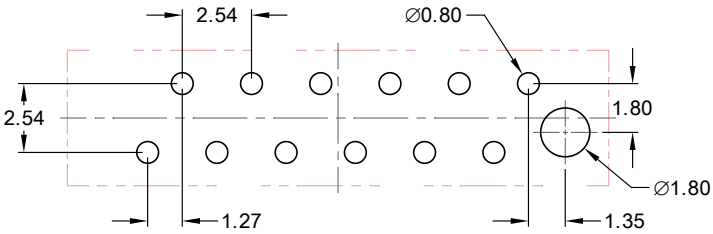

Dimensions (mm)

Contacts	DIM "A"	DIM "B"	DIM "C"	Contacts	DIM "A"	DIM "B"	DIM "C"	Contacts	DIM "A"	DIM "B"	DIM "C"
004	9.70	3.81	5.60	**012**	19.86	13.97	15.76	**020**	30.02	24.13	25.92
006	12.24	6.35	8.14	**014**	22.40	16.51	18.30	**022**	32.56	26.67	28.46
008	14.78	8.89	10.68	**016**	24.94	19.05	20.84	**024**	35.10	29.21	31.00
010	17.32	11.43	13.22	**018**	27.48	21.59	23.38	**026**	37.64	31.75	33.54

How to order

MMF - xxx - SL50 - 99 /X

Nbr of contacts

004; 006; 008; 010
012; 014; 016; 018
020; 022; 024; 026

Plating

99 = Tin *(leadfree)*

other platings on request

Option

no suffix if Tube packing; without "PickUp Cap"
/A = Tube packing; with "PickUp Cap"
/B = Reel packing; with "PickUp Cap Cap"

Mini – Mate Connector

- THT - right angle female Block Shape

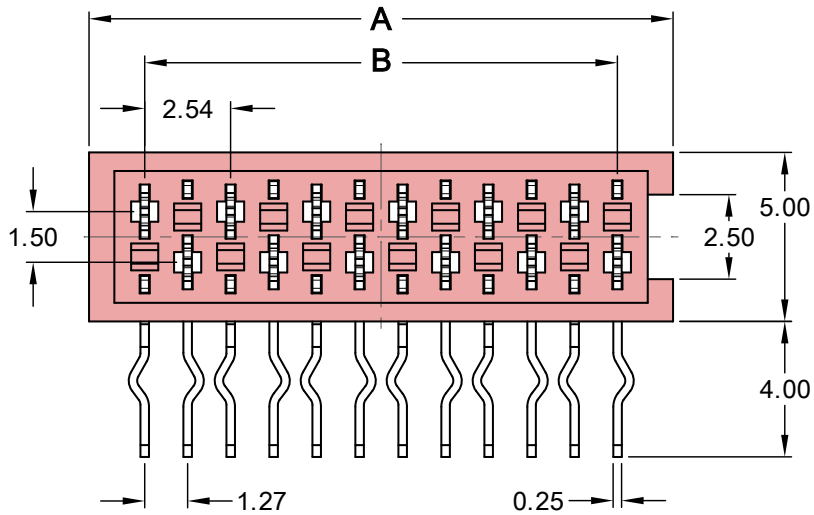

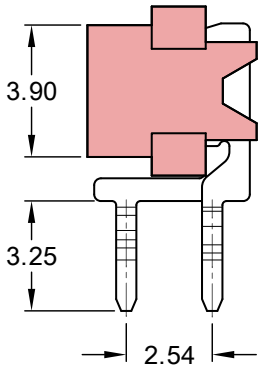

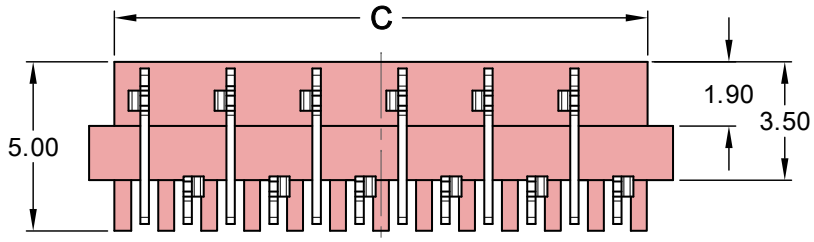

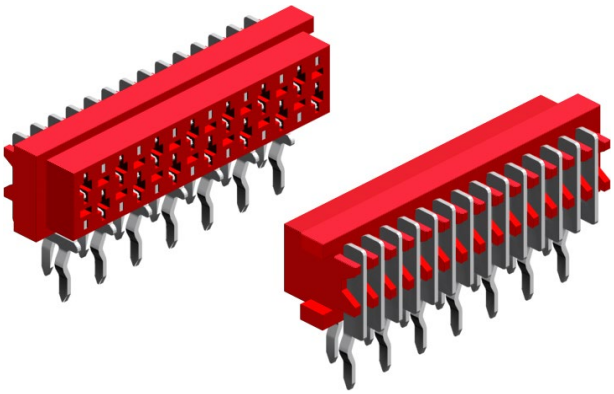

Specifications

Current rating		1.0 A max.
Voltage rating		230 V AC/DC
Withstanding voltage		500 V AC
Contact resistance		20 mΩ max.
Insulation resistance		1000 MΩ min.
Operating temperature		- 40°C to +105°C
Processing temperature		+260°C +0/-5°C for 5 Sec.
Insulator material	*(RoHS compliant)*	PA46 (red) UL 94 V-0
Contact material	*(RoHS compliant)*	Phosphor Bronze

PCB Hole Layout

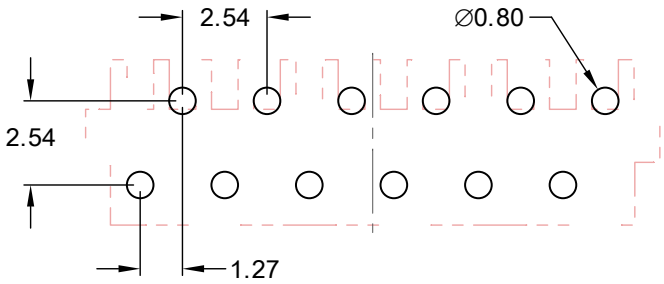

Dimensions (mm)

Contacts	DIM "A"	DIM "B"	DIM "C"	Contacts	DIM "A"	DIM "B"	DIM "C"	Contacts	DIM "A"	DIM "B"	DIM "C"
004	7.00	3.81	5.60	**012**	17.16	13.97	15.76	**020**	27.32	24.13	25.92
006	9.54	6.35	8.14	**014**	19.70	16.51	18.30	**022**	29.86	26.67	28.46
008	12.08	8.89	10.68	**016**	22.24	19.05	20.84	**024**	32.40	29.21	31.00
010	14.62	11.43	13.22	**018**	24.78	21.59	23.38	**026**	34.94	31.75	33.54

How to order

MMF - xxx - RB50 - 99

Nbr of contacts

004; **006**; **008**; **010**
012; **014**; **016**; **018**
020; **022**; **024**; **026**

Plating

99 = Tin
(leadfree)

other platings
on request

Mini – Mate Connector

- THT - right angle female Latch Shape

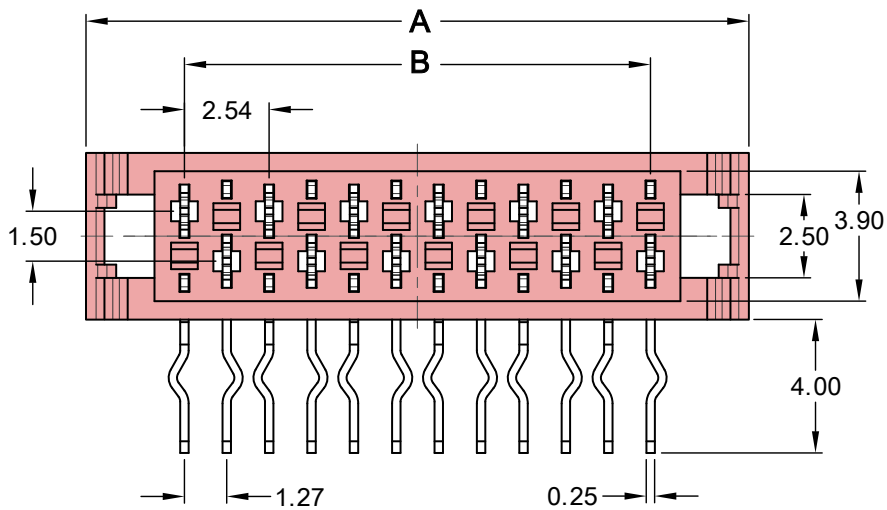

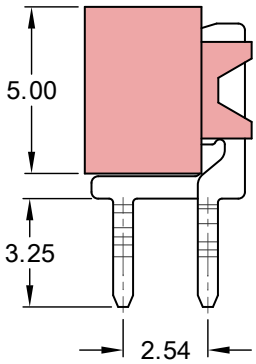

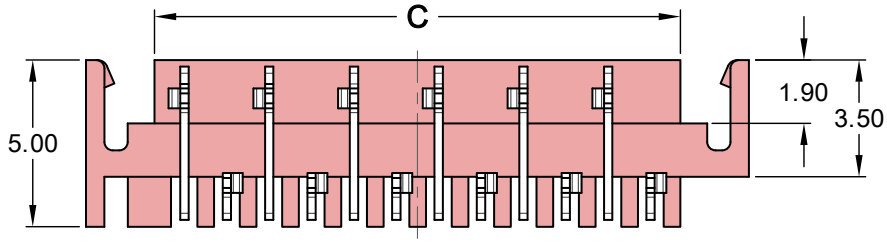

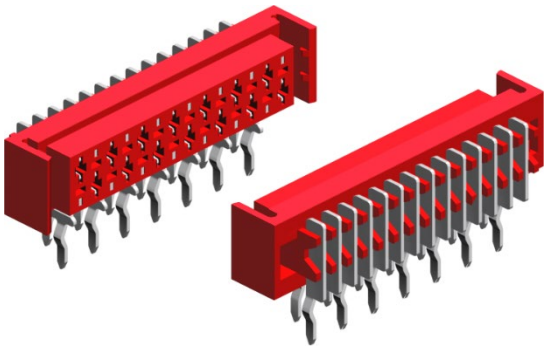

Specifications

Current rating		1.0 A max.
Voltage rating		230 V AC/DC
Withstanding voltage		500 V AC
Contact resistance		20 mΩ max.
Insulation resistance		1000 MΩ min.
Operating temperature		- 40°C to +105°C
Processing temperature		+260°C +0/-5°C for 5 Sec.
Insulator material	*(RoHS compliant)*	PA46 (red) UL 94 V-0
Contact material	*(RoHS compliant)*	Phosphor Bronze

PCB Hole Layout

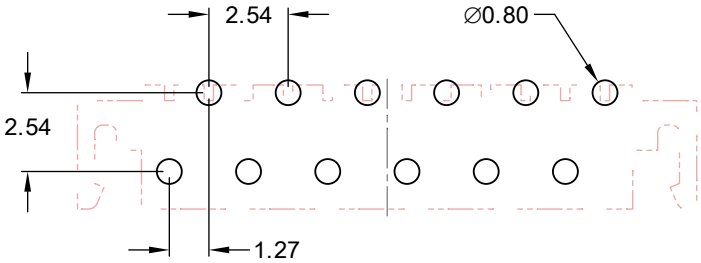

Dimensions (mm)

Contacts	DIM "A"	DIM "B"	DIM "C"	Contacts	DIM "A"	DIM "B"	DIM "C"	Contacts	DIM "A"	DIM "B"	DIM "C"
004	9.70	3.81	5.60	**012**	19.86	13.97	15.76	**020**	30.02	24.13	25.92
006	12.24	6.35	8.14	**014**	22.40	16.51	18.30	**022**	32.56	26.67	28.46
008	14.78	8.89	10.68	**016**	24.94	19.05	20.84	**024**	35.10	29.21	31.00
010	17.32	11.43	13.22	**018**	27.48	21.59	23.38	**026**	37.64	31.75	33.54

How to order

MMF - xxx - RL50 - 99

Nbr of contacts

004; 006; 008; 010
012; 014; 016; 018
020; 022; 024; 026

Plating

99 = Tin
(leadfree)

other platings
on request

Mini – Mate Connector

- THT - straight male shrouded

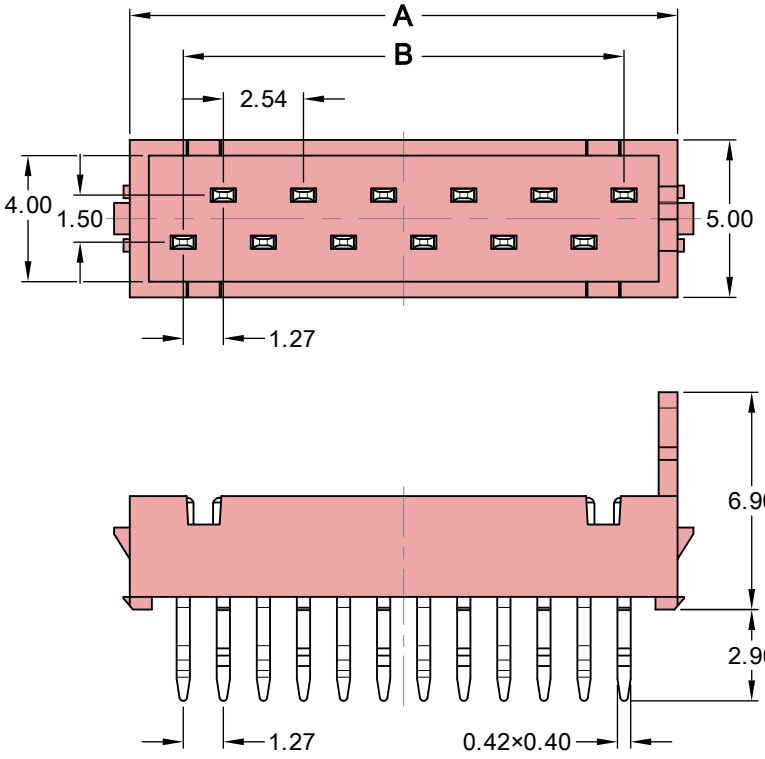

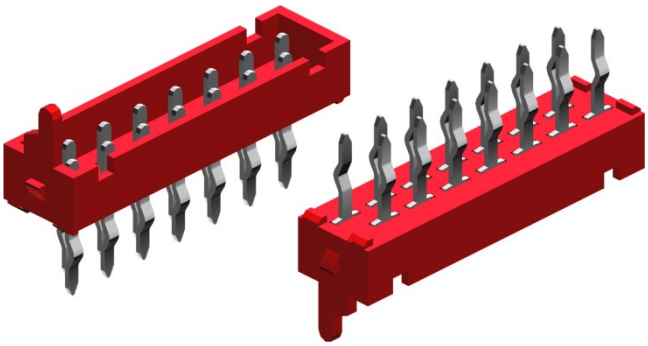

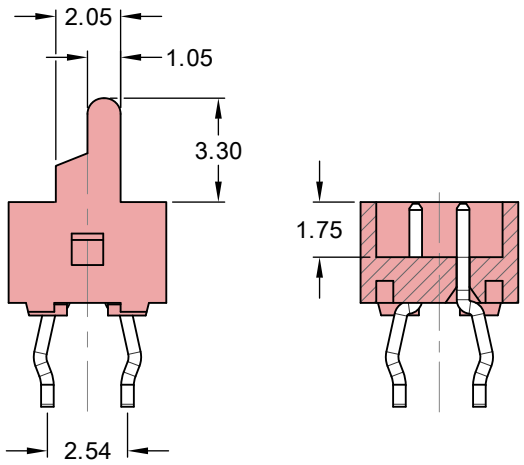

Specifications

Current rating	1.0 A max.
Voltage rating	230 V AC/DC
Withstanding voltage	500 V AC
Contact resistance	20 mΩ max.
Insulation resistance	1000 MΩ min.
Operating temperature	- 40°C to +105°C
Insulator material *(RoHS compliant)*	PBT (red) UL 94 V-0
Contact material *(RoHS compliant)*	Phosphor Bronze

PCB Hole Layout

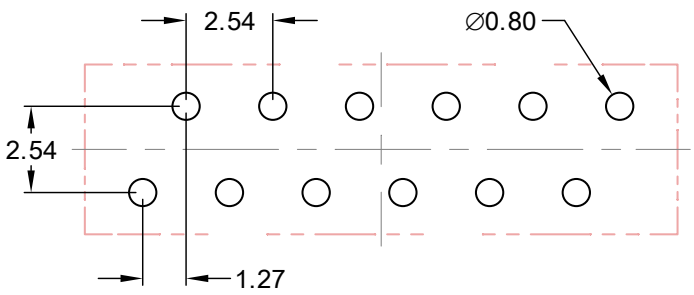

Dimensions (mm)

Contacts	DIM "A"	DIM "B"	Contacts	DIM "A"	DIM "B"	Contacts	DIM "A"	DIM "B"
004	7.20	3.81	**012**	17.36	13.97	**020**	27.52	24.13
006	9.74	6.35	**014**	19.90	16.51	**022**	30.06	26.67
008	12.28	8.89	**016**	22.44	19.05	**024**	32.60	29.21
010	14.82	11.43	**018**	24.98	21.59	**026**	35.14	31.75

How to order

MMM - xxx - SS50 - 99

Nbr of contacts

004; **006**; **008**; **010**
012; **014**; **016**; **018**
020; **022**; **024**; **026**

Plating

99 = Tin *(leadfree)*

other platings on request

Mini – Mate Connector

- SMT - shrouded male

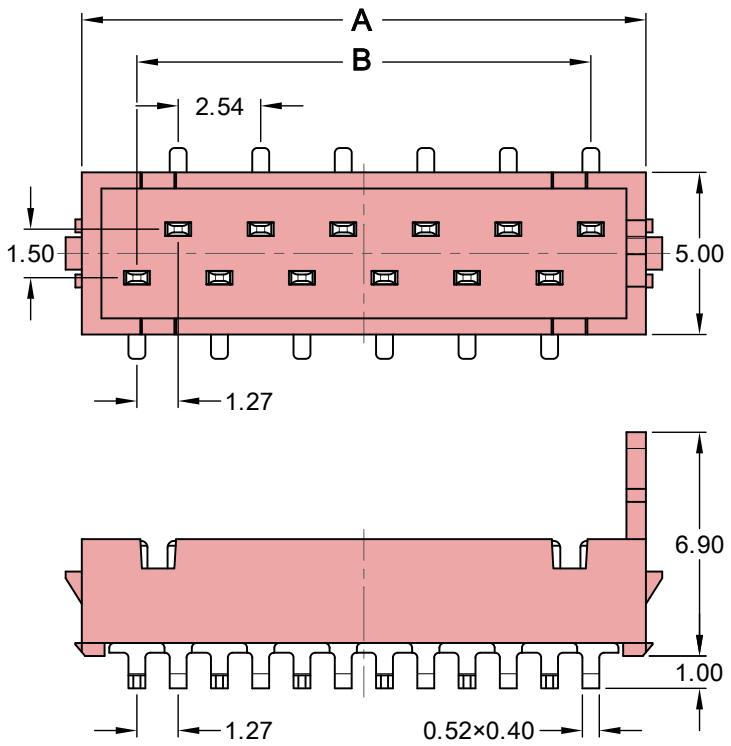

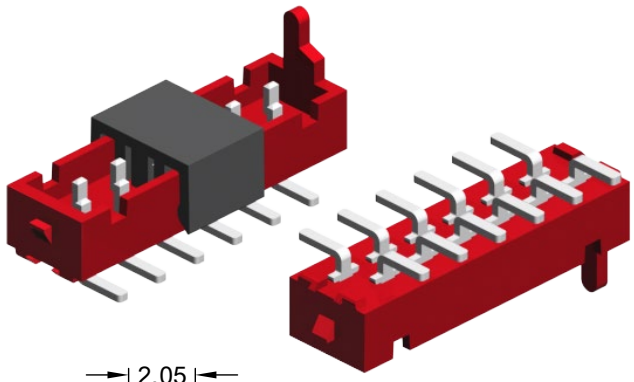

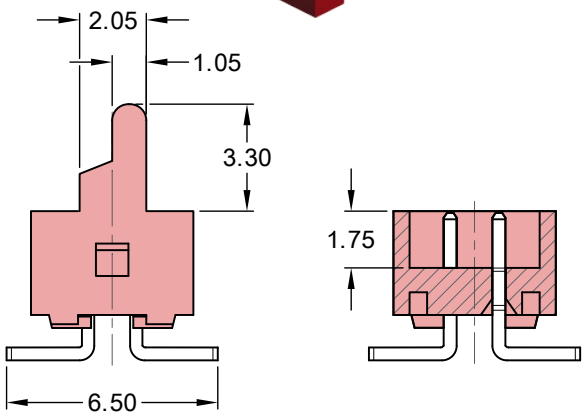

Specifications

Current rating		1.0 A max.
Voltage rating		230 V AC/DC
Withstanding voltage		500 V AC
Contact resistance		20 mΩ max.
Insulation resistance		1000 MΩ min.
Operating temperature		- 40°C to +105°C
Processing temperature		+260°C +0/-5°C for 5 Sec.
Insulator material	*(RoHS compliant)*	PA46 (red) UL 94 V-0
Contact material	*(RoHS compliant)*	Phosphor Bronze

PCB Surface Mount Layout

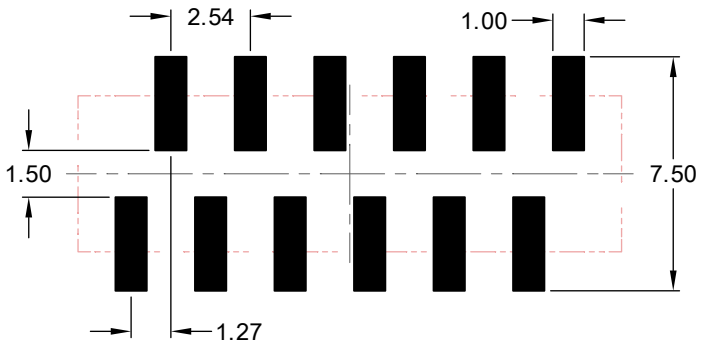

Dimensions (mm)

Contacts	DIM "A"	DIM "B"	Contacts	DIM "A"	DIM "B"	Contacts	DIM "A"	DIM "B"
004	7.20	3.81	**012**	17.36	13.97	**020**	27.52	24.13
006	9.74	6.35	**014**	19.90	16.51	**022**	30.06	26.67
008	12.28	8.89	**016**	22.44	19.05	**024**	32.60	29.21
010	14.82	11.43	**018**	24.98	21.59	**026**	35.14	31.75

How to order

MMM - xxx - HS50 - 99/X

Nbr of contacts	Plating	Option
004; 006; 008; 010 **012; 014; 016; 018** **020; 022; 024; 026**	**99** = Tin *(leadfree)* other platings on request	**A** = Tube packing; with "PickUp Cap" **T** = Tube packing; without "PickUp Cap" **B** = Reel packing; with "PickUp Cap" **R** = Reel packing; without "PickUp Cap"

1.00mm Wire to Board
Crimp Contact Connectors

RoHS compliant

E-tec Interconnect

L - Type Female Plug

single row

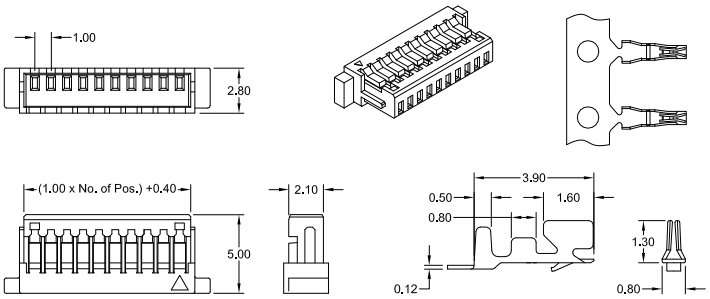

Order Code Housing: CRF-1xx-L100 Contact: CRF-999/35-L100-99

dual row

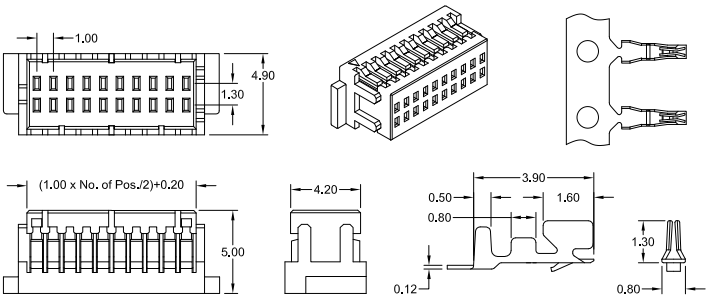

Order Code Housing: CRF-2xx-L100 Contact: CRF-999/35-L100-99

L - Type Male Header

single row -SMT- straight *(top entry)*

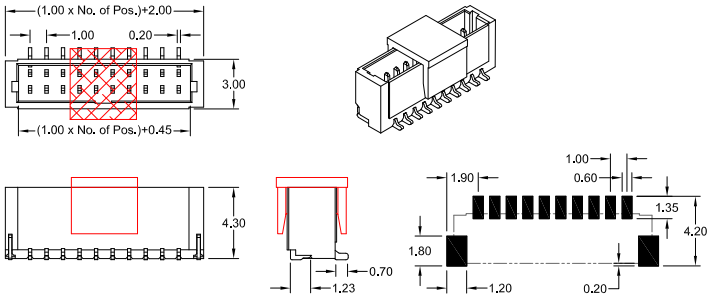

Order Code: CRS-1xx-SL100-99/B

dual row -SMT- straight *(top entry)*

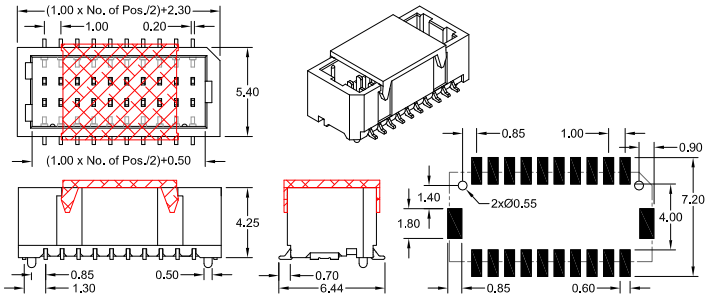

Order Code: CRS-2xx-SL100-95/E

single row -SMT- right angle *(side entry)*

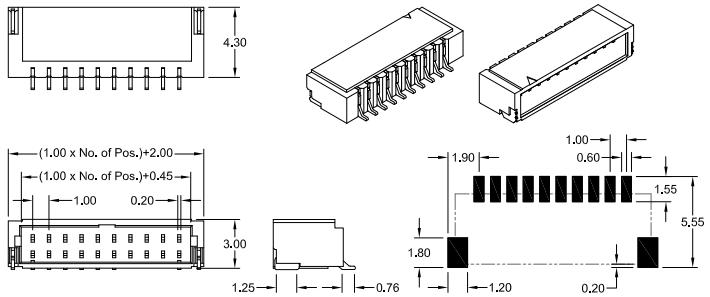

Order Code: CRR-1xx-SL100-99/R

dual row -SMT- right angle *(side entry)*

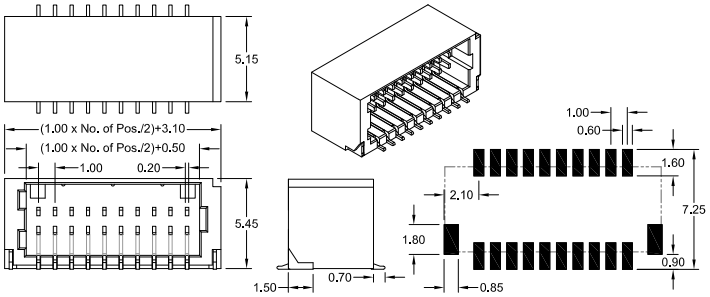

Order Code: CRR-2xx-SL100-99/R

Specifications

Current rating	1 A	Voltage rating	50 V AC max.	Contact material	Phosphor Bronze
Insulation resistance	100 MΩ min.	Withstanding voltage	500 V AC	Insulator material	PA9T UL 94V-0
Contact resistance	20 mΩ max.	Operating temp.	-25°C to +85°C	CRR-2xx	PA6T UL 94-V0
		SMT Processing temp.	+250°C for 5 sec.	CRF Type	PA66 UL 94V-0

How to order

CR X - x xx - X 100 - 99 / X

Type	Rows	Nbr of Contacts	Execution	Plating	Packing
F = Female	**1** = single row	**02** to **20**	**L** = Plug	**99** = Tin *(leadfree)*	**R** = Reel
R = R/A Male	**2** = dual row	**20, 30, 40** & **50**	**SL** = SMT	**95** = Tin/Gold *(leadfree)*	**B** = Reel with PickUp Cap
S = Straight Male	*if Crimp Contact:* **9**	*if Crimp Contact:* *(MOQ: 10K / reel)* **99/35** = AWG 28~32	for details see above dwg's	other platings on request	**E** = Reel with PickUp Cap

1.25mm Wire to Board
Crimp Contact Connectors

RoHS compliant

E-tec Interconnect

S - Type Single Row

Female Plug

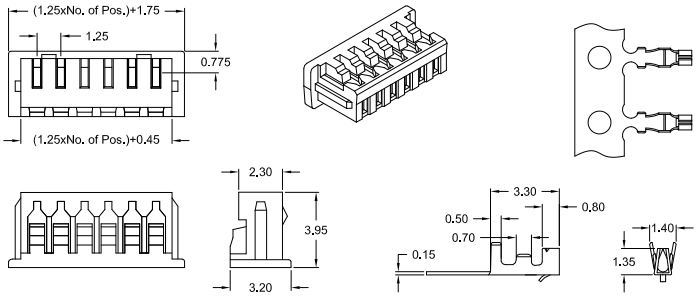

Order Code Housing: CRF-1xx-S125 Contact: CRF-999/35-S125-99

-THT- Male Header straight *(top entry)* & right angle *(side entry)*

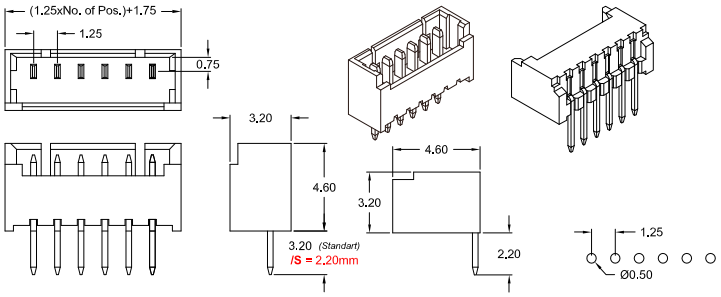

Order Code straight: CRS-1xx-S125-99/S right angle: CRR-1xx-S125-99

-SMT- Male Header right angle *(side entry)*

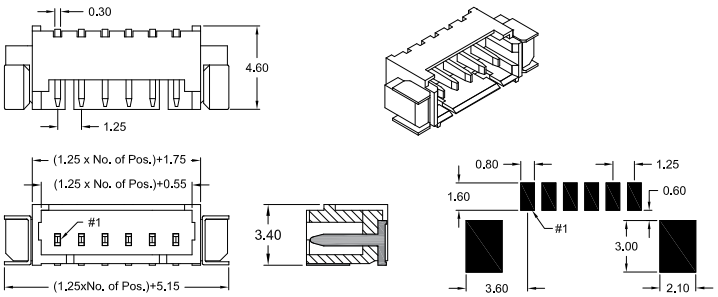

Order Code: CRR-1xx-SS125-99/R

-SMT- Male Header straight *(top entry)*

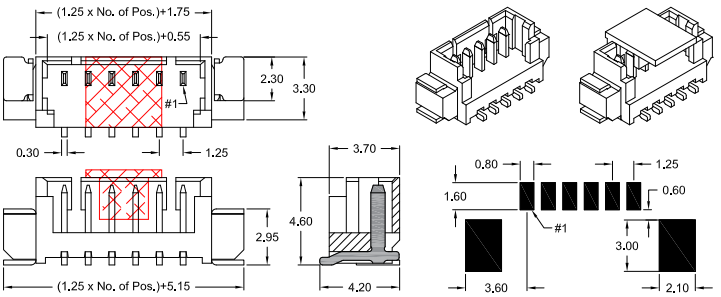

Order Code: CRS-1xx-SS125-99/R CRS-1xx-SS125-99/B

D - Type Single Row

Female Plug

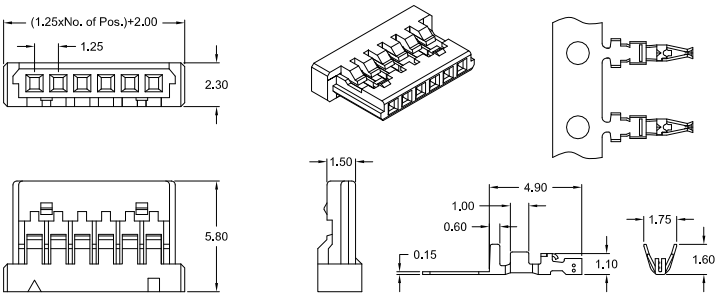

Order Code Housing: CRF-1xx-D125 Contact: CRF-999/35-D125-95

-SMT- Male Header right angle *(side entry)*

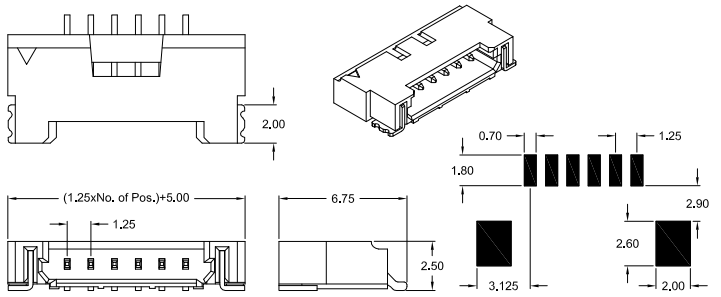

Order Code: CRR-1xx-SD125-99/R

Specifications

Current rating	1 A	Withstanding voltage	250 V AC	Contact material	Copper Alloy
Insulation resistance	100 MΩ min.	Operating temperature	-40°C to +85°C	Insulator material	PA6T UL 94V-0
Contact resistance	20 mΩ max.	D125 Type	-25°C to +85°C	CRF Type	PA66 UL 94V-0
Voltage rating	125 V AC	SMT Processing temp.	+250°C for 5 sec.	SD125 Type	PA9T UL 94V-0
				PCB thickness	1.60 mm

How to order

CR X - x xx - X 125 - 99 / X

Type	Rows	Nbr of Contacts	Execution	Plating	Packing
F = Female **R** = R/A Male **S** = Straight Male	**1** = single row *if Crimp Contact:* **9**	**02 - 15** = S & SS - Type **02 - 30** = D & SD - Type *if Crimp Contact:* *(MOQ: 10K/reel)* **99/35** = AWG 28~32	**S** = Plug **SS** = SMT **D** = Plug **SD** = SMT for details see above dwg's	**99** = Tin **95** = Tin/Gold *(tin leadfree)* other platings on request	**R** = Reel w/o PickUp Cap **B** = Reel with PickUp Cap

1.50mm Wire to Board

Crimp Contact Connectors

RoHS compliant

E-tec Interconnect

K - Type Single Row

Female Plug

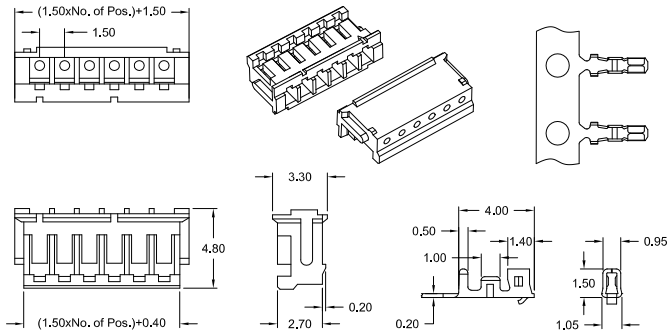

Order Code Housing: CRF-1xx-K150 Contact: CRF-999/35-K150-99

-THT- Male Header right angle *(side entry)*

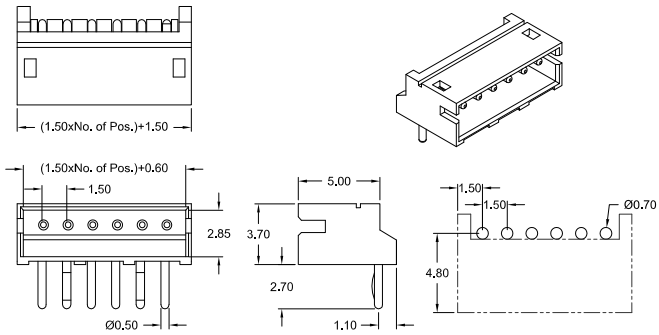

Order Code: CRR-1xx-K150-99

-THT- Male Header straight *(top entry)*

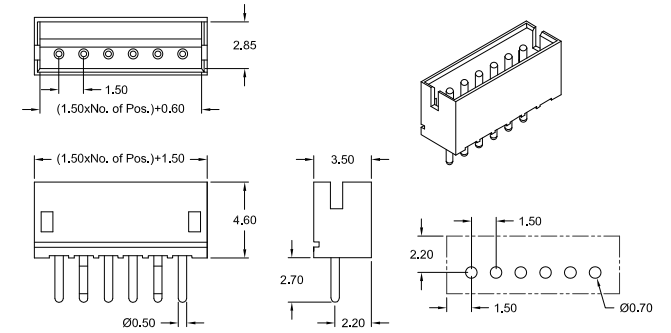

Order Code: CRS-1xx-K150-99

-SMT- Male Header right angle *(side entry)*

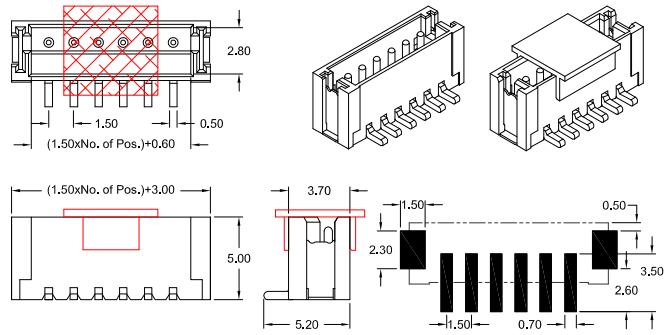

Order Code: CRS-1xx-SK150-99/B

-SMT- Male Header right angle *(side entry)*

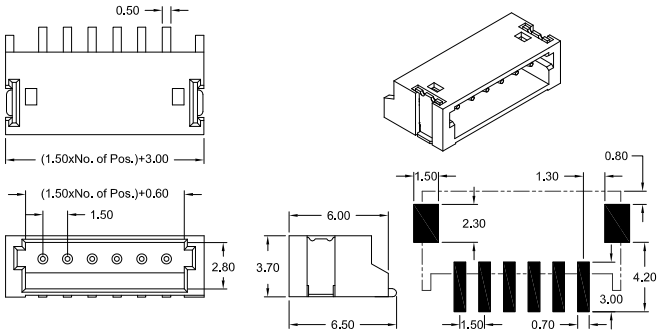

Order Code: CRR-1xx-SK150-99/R

Specifications

Current rating	1 A	Voltage rating	50 V AC max.	Contact material	Brass
Insulation resistance	500 MΩ min.	Withstanding voltage	500 V AC	Insulator material K150	PA66 UL 94V-0
Contact resistance	20 mΩ max.	Operating temperature	-25°C to +85°C	Insulator material SK150	PA9T UL 94V-0
		SMT Processing temp.	+250°C for 5 sec.	PCB thickness	1.60 mm

How to order

CR X - x xx - X 150 - 99 / X

Type	Rows	Nbr of Contacts	Execution	Plating	Packing
F = Female **R** = R/A Male **S** = Straight Male	**1** = single row *if Crimp Contact:* **9**	**02** to **13** *if Crimp Contact:* *(MOQ: 10K / reel)* **99/35** = AWG 28~32	**K** = THT & Plug **SK** = SMT for details see above dwg's	**99** = Tin *(leadfree)* other platings on request	**R** = Reel **B** = Reel with PickUp Cap

2.00mm Wire to Board

Crimp Contact Connectors

RoHS compliant

E-tec Interconnect

O - Type Single Row

Female Plug

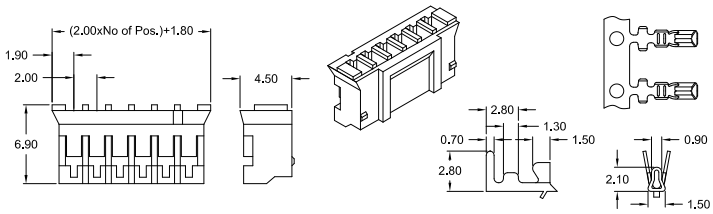

Order Code Housing: CRF-1xx-O200 Contact: CRF-999/30-O200-99

-THT- Male Header straight *(top entry)* & right angle *(side entry)*

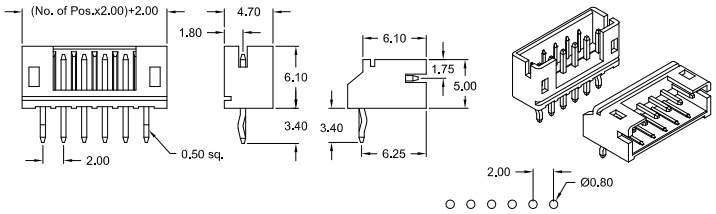

Order Code straight: CRS-1xx-O200-99 right angle: CRR-1xx-O200-99

H - Type Wire to Board Plugs *mating with 2.00mm pitch Pin-Header*

single row

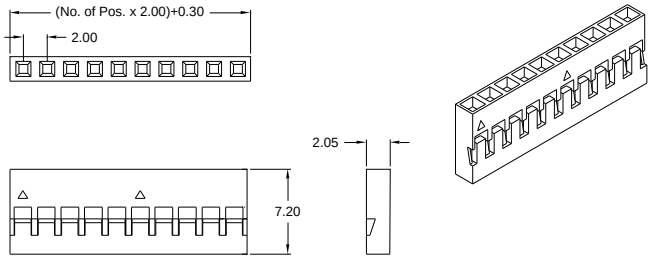

Order Code Housing: CRF-1xx-H200

dual row

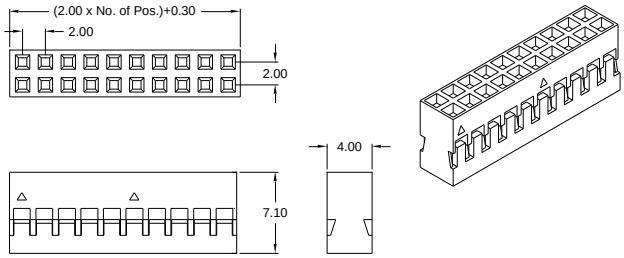

Order Code Housing: CRF-2xx-H200

Female Contact

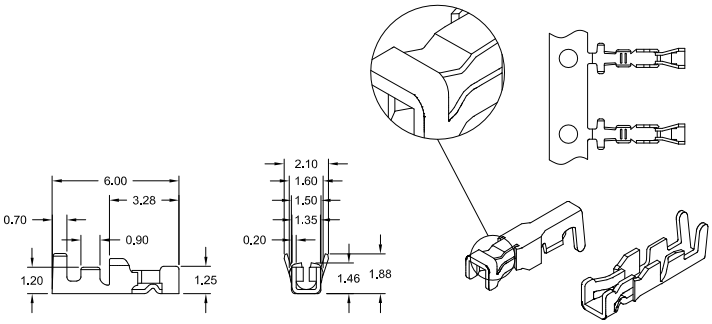

for single row 02 ~ 19 & dual row 04 ~ 18 position

Order Code: CRF-999L/32-H200-55 *MOQ 10K / reel*

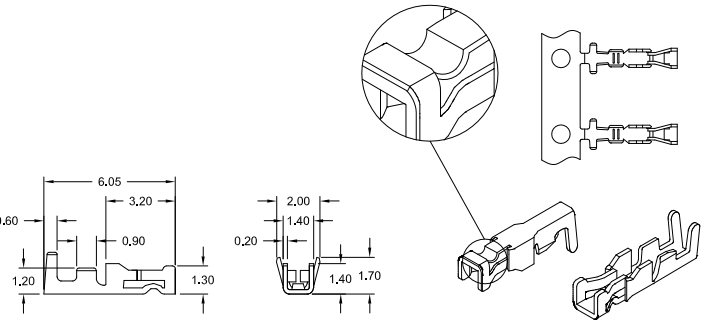

for single row 20 ~ 40 & dual row 20 ~ 80 position

Order Code: CRF-999/32-H200-55 *MOQ 10K / reel*

Specifications

Current rating	2 A	Voltage rating	100 V AC max.	Contact material	Copper Alloy
Insulation resistance	1000 MΩ min.	Withstanding voltage	800 V AC	Insulator material	PA66 UL 94V-0
Contact resistance	20 mΩ max.	Operating temperature	-25°C to +85°C	H-Type	PA66 UL 94V-2
				PCB thickness	1.60 mm

How to order

CR X - x xx - X 200 - 99

Type	Rows	Nbr of Contacts	Execution	Plating
F = Female	**1** = single row	**02 - 16** = O – Type	**O** = THT & Plug	**99** = Tin *(leadfree)*
R = R/A Male	**2** = dual row	**02 - 40** = H – Type - 1 row	**H** = Plug	**55** = Gold
S = Straight Male	*if Crimp Contact:* **9**	**04 - 80** = H – Type - 2 row	for details see above dwg's	other platings on request
		if Crimp Contact for O-Type: **99/30** = for AWG 24~30		
		if Crimp Contact for H-Type: **99L/32** = for AWG 26~30		
		99/32 = for AWG 26~30		

2.00mm Wire to Board
Crimp Contact Connectors

RoHS compliant

E-tec Interconnect

D - Type Dual Row

Female Plug

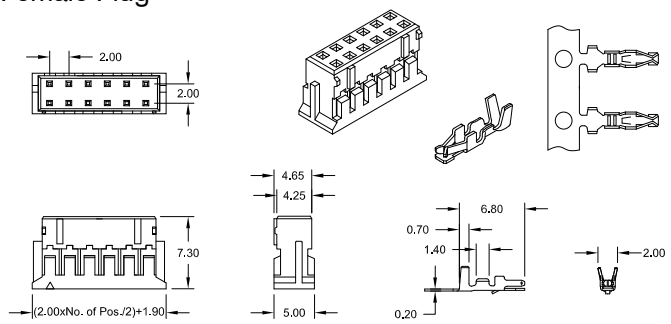

Order Code Housing: CRF-2xx-D200 Contact: CRF-999/27-DP200-99

-THT- Male Header straight *(top entry)* & right angle *(side entry)*

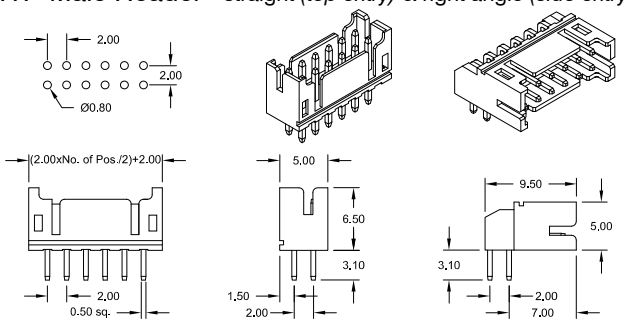

Order Code straight: CRS-2xx-D200-99 right angle: CRR-2xx-D200-99

C - Type Single Row

Female Plug

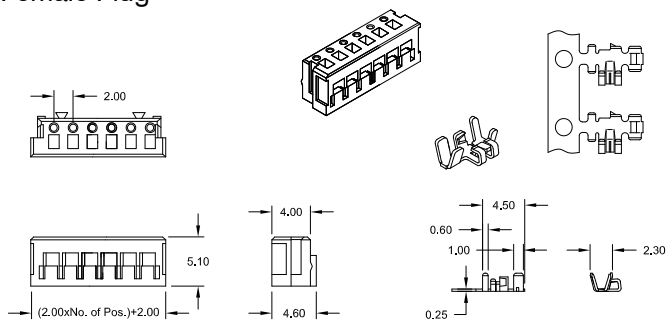

Order Code housing: CRF-1xx-C200 contact: CRF-999/29-C200-99

-SMT- Male Header straight *(top entry)*

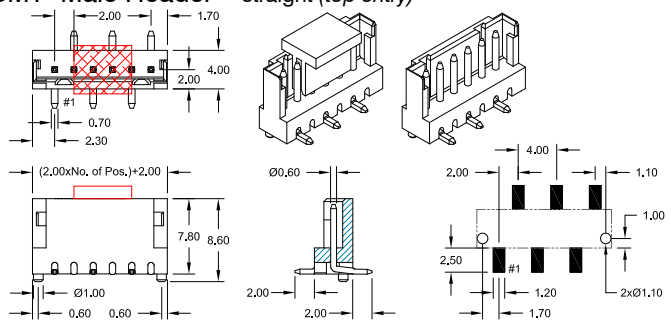

Order Code straight: CRS-1xx-SC200-99/X

-THT- Male Header straight *(top entry)* & right angle *(side entry)*

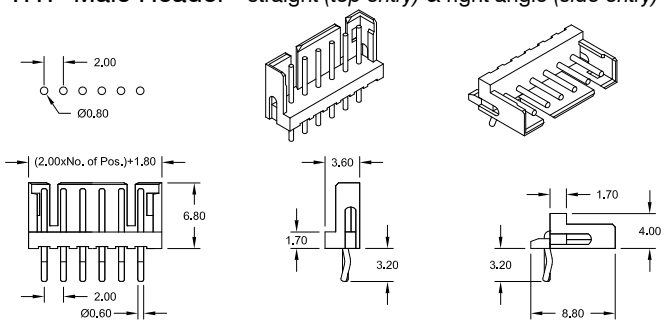

Order Code straight: CRS-1xx-C200-99 right angle: CRR-1xx-C200-99

Specifications

Current rating	2 A	Withstanding voltage	800 V AC	Contact material	Brass; DP = PhBz
Insulation resistance	1000 MΩ min.	Operating temperature	-25°C to +85°C	Insulator material	PA66 UL 94V-0
Contact resistance	20 mΩ max.	SC200 Type	-25°C to +105°C	SC200 Type	PA9T UL 94V-0
Voltage rating	100 V AC max.	SMT Processing temp.	+250°C for 5 sec.	PCB thickness	1.60 mm

How to order

CR X - x xx - X 200 - 99 / X

Type	Rows	Nbr of Contacts	Execution	Plating	Packing
F = Female **R** = R/A Male **S** = Straight Male	**1** = single row **2** = dual row *if Crimp Contact:* **9**	**04 - 40** = D – Type **02 - 16** = C – Type **03 - 06** = SC – Type *if Crimp Contact:* *(MOQ: 10K / reel)* **99/27** = AWG 22~28 **99/29** = AWG 24~28	**D** = THT & Plug **DP** *see Contact Material* **C** = THT & Plug **SC** = SMT for details see above dwg's	**99** = Tin *(leadfree)* other platings on request	**A** = Tube with PickUp Cap **B** = Reel with PickUp Cap

2.00mm Wire to Board

Crimp Contact Connectors

RoHS compliant

E-tec Interconnect

K - Type Single Row

female plug

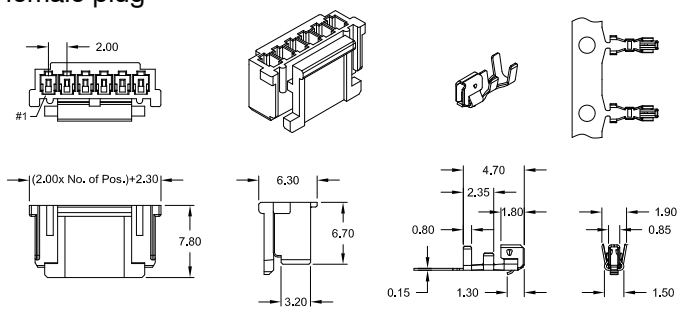

Order Code housing: CRF-1xx-K200 contact: CRF-999/30-K200-99

-SMT- male header right angle *(side entry)*

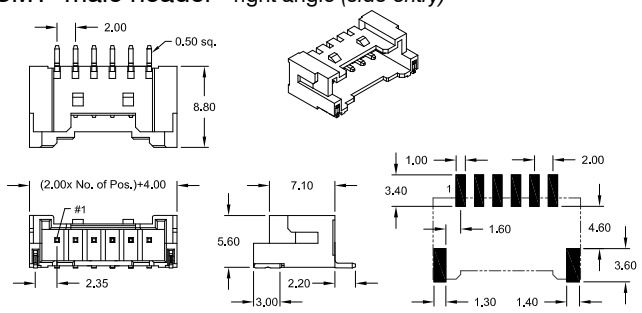

Order Code right angle: CRR-1xx-SK200-xx/X

P - Type Single Row

female plug

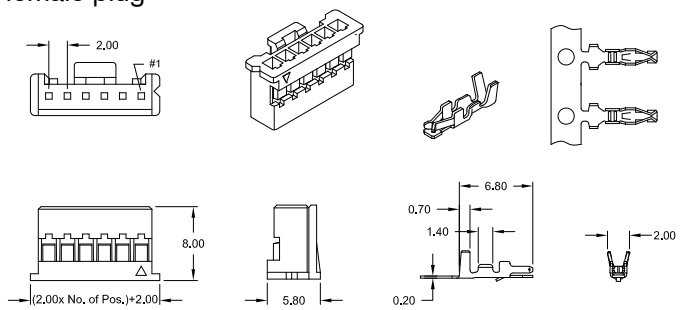

Order Code housing: CRF-1xx-P200 contact: CRF-999/27-DP200-xx

-THT- male header straight *(top entry)* & right angle *(side entry)*

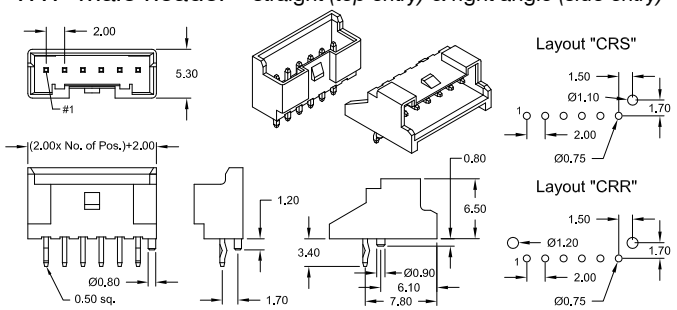

Order Code straight: CRS-1xx-P200-99/P right angle: CRR-1xx-P200-xx/P

SH - Type Single Row

female plug

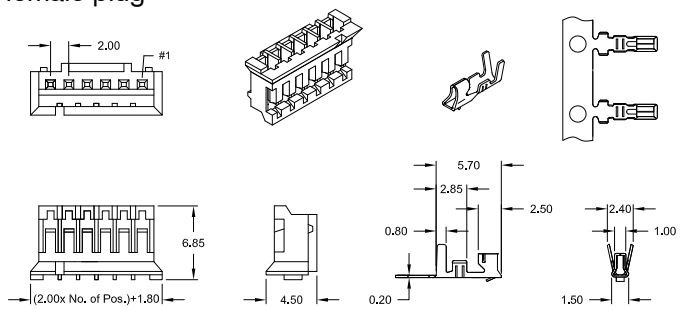

Order Code housing: CRF-1xx-SH200 contact: CRF-999/30-SH200-99

-SMT- male header straight *(top entry)* & right angle *(side entry)*

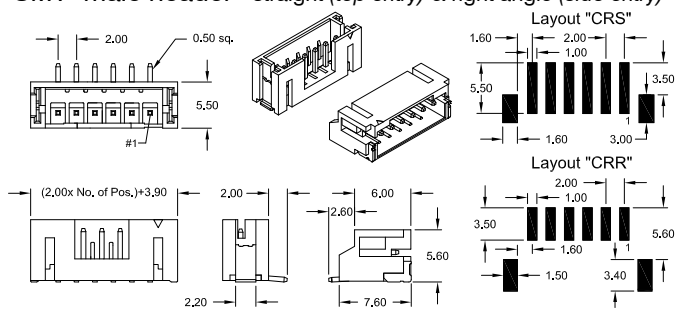

Order Code straight: CRS-1xx-SH200-99/X right angle: CRR-1xx-SH200-99/X

Specification

Current rating	2 A	Operating temperature	-25°C to +85°C	Contact material	Copper Alloy
Insulation resistance	1000 MΩ min.	if PA6T	-40°C to +105°C	Insulator material	all UL 94 V-0
Contact resistance	20 mΩ max.			CRF-P; K & SH	PA66
Voltage rating	250 V AC max.	SMT Processing temp.	+250°C for 5 sec.	CRS- & CRR-P	PBT
Withstanding voltage	800 V AC			CRS-SH; CRR-SH	PA6T SK = PA9T

How to order

CR X - x xx - X 200 - xx /X

Type	Rows	Nbr of contacts	Execution	Plating	Packing
F = Female	**1** = single row	**04 - 20** = K – Type	**K**	**99** = Tin *(leadfree)*	only if SMT Type
R = R/A male		**02 - 15** = P – Type	**P**	**55** = Gold	**/B** = Reel with PickUp Cap
S = Straight male	*if Crimp Contact:* **9**	**02 - 16** = SH – Type	**SH**		**/R** = Reel w/o PickUp Cap
		if Crimp Contact: *(MOQ: 10K / reel)* **99/27** = AWG 22~28 **99/30** = AWG 24~30	**SK**		
			DP		
			for details see above dwg's	other platings on request	

2.50mm Wire to Board
Crimp Contact Connectors

RoHS compliant

E-tec Interconnect

S - Type Single Row

Female Plug

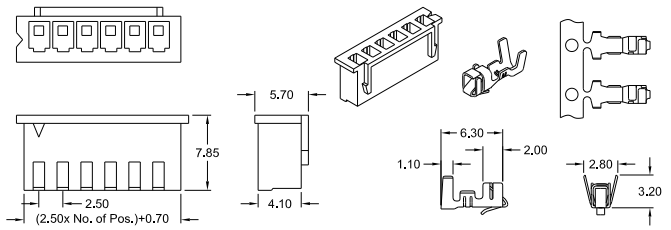

Order Code Housing: CRF-1xx-S250 Contact: CRF-999/27-S250-99

-THT- Male Header straight *(top entry)* & right angle *(side entry)*

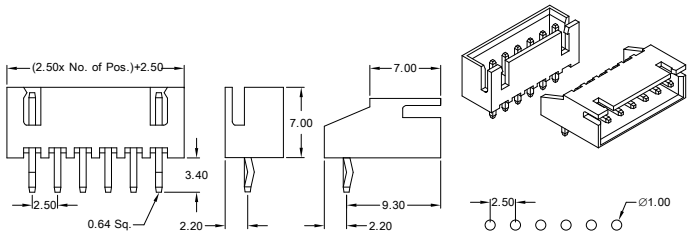

Order Code straight: CRS-1xx-S250-99 right angle: CRR-1xx-S250-99

I - Type Single Row

Female Plug

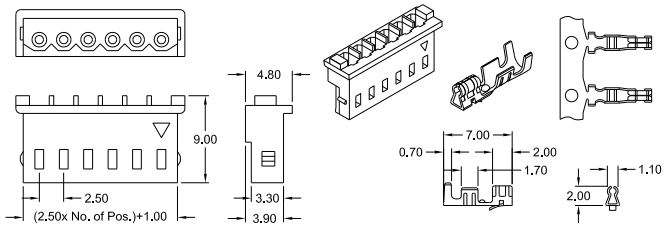

Order Code Housing: CRF-1xx-I250 contact: CRF-999/27-I250-99

-THT- Male Header straight *(top entry)* & right angle *(side entry)*

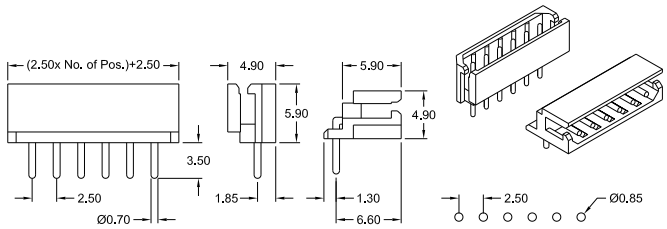

Order Code straight: CRS-1xx-I250-99 right angle: CRR-1xx-I250-99

R - Type Single Row

Female plug

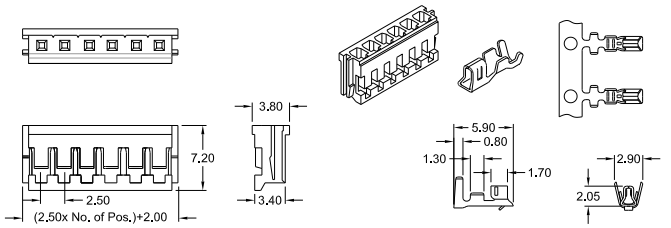

Order Code Housing: CRF-1xx-R250 Contact: CRF-999/28-R250-99

-THT- Male Header straight *(top entry)* & right angle *(side entry)*

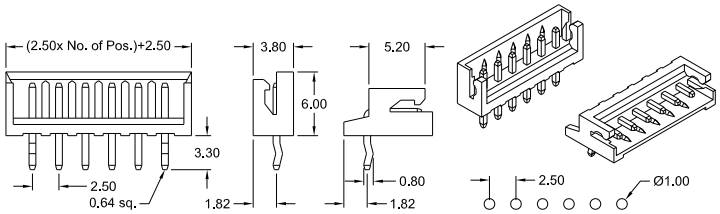

Order Code straight: CRS-1xx-R250-99 right angle: CRR-1xx-R250-99

Specifications

Current rating	3 A	Voltage rating	250 V AC max.	Contact material	Copper Alloy
Insulation resistance	1000 MΩ min.	Withstanding voltage	1000 V AC	Insulator material	PA66 UL 94V-0
Contact resistance	20 mΩ max.	Operating temperature	-25°C to +85°C	PCB thickness	1.60 mm

How to order

CR X - x xx - X 250 - 99

Type	Rows	Nbr of Contacts	Execution	Plating
F = Female	**1** = single row	**02 - 20** = S – Type	**S** = THT & Plug	**99** = Tin *(leadfree)*
R = R/A male	*if Crimp Contact:*	**02 - 15** = I & R – Type	**I** = THT & Plug	
S = Straight male	**9**	*if Crimp Contact:* *(MOQ: 10K / reel)* *for S- & I-Type:*	**R** = THT & Plug	
		99/27 = for AWG 22~28 *for R-Type:*	for details see above dwg's	other platings on request
		99/28 = for AWG 22~30		

2.54mm Wire to Board

Crimp Contact Connectors

RoHS compliant

E-tec Interconnect

UT - Type Single Row

Female Plug

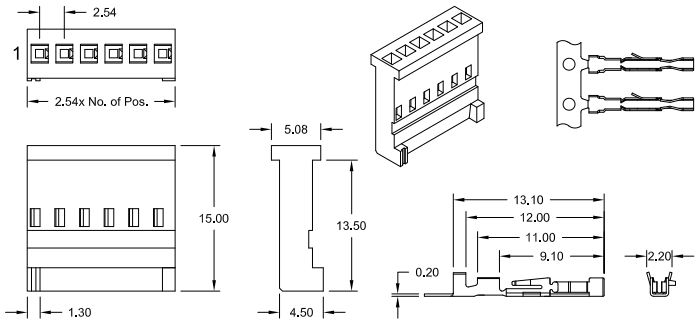

Order Code Housing: CRF-1xx-UT254 Contact: CRF-999/27-UT254-99

-THT- Male Header straight & right angle

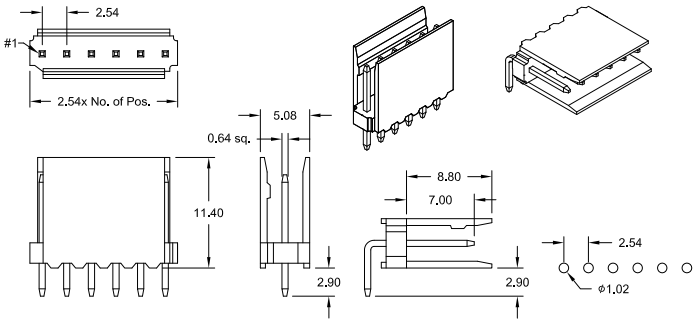

Order Code straight: CRS-1xx-UT254-99 right angle: CRR-1xx-UT254-99

P - Type "Friction Lock" Single Row

Female Plug

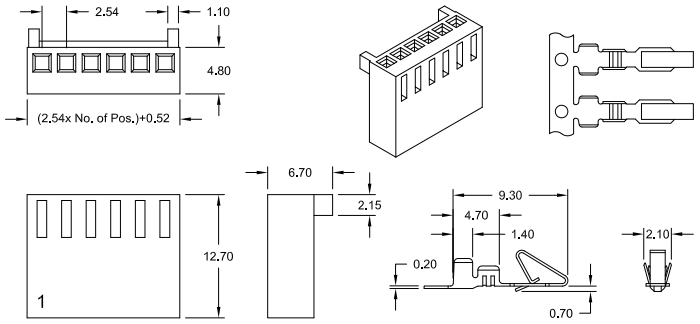

Order Code Housing: CRF-1xx-P254 Contact: CRF-999/27-P254-99

-THT- Male Header straight & right angle

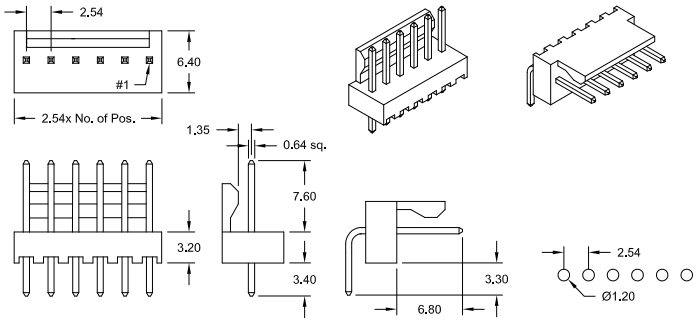

Order Code straight: CRS-1xx-P254-99 right angle: CRR-1xx-P254-99

-SMT- Male Header straight

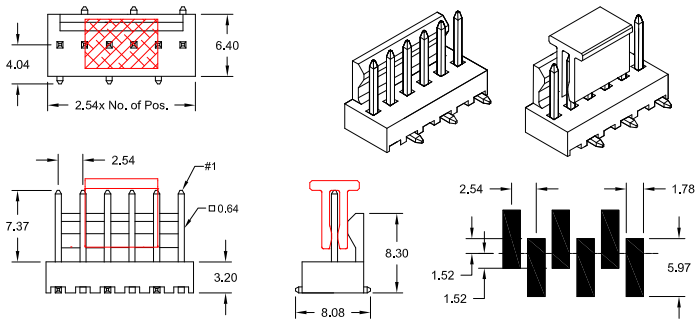

Order Code: CRS-1xx-SP254-99/A *(Tube)* CRS-1xx-SP254-99/B *(Reel)*

Specifications

Current rating	3 A	Voltage rating	250 V AC max.	Contact material	Copper Alloy
Insulation resistance	1000 MΩ min.	Withstanding voltage	1500 V AC	Insulator material	PA 66 (brown) UL 94V-0
Contact resistance	20 mΩ max.	Operating temperature	-25°C to +85°C	CRF-UT Type	PBT (brown) UL 94V-0
		SMT Processing temp.	+250°C for 5 sec.	CRS(R)-UT Type	PA 66 (black) UL 94V-0
				SP Type	PA 46 (white) UL 94V-0

How to order

CR X - x xx - X 254 - 99

Type	Rows	Nbr of Contacts	Execution	Plating
F = Female	**1** = single row	**02 - 20** = UT & P – Type	**UT** = Plug & THT	**99** = Tin *(leadfree)*
R = R/A Male		**02 - 12** = SP – Type	**P** = Plug & THT	
S = Straight Male	*if Crimp Contact:* **9**	*if Crimp Contact:* *MOQ: 10K / reel* **99/27** = for AWG 22~28	**SP** = SMT	
			for details see above dwg's	other platings on request

2.54mm Wire to Board

Crimp Contact Connectors

RoHS compliant

E-tec Interconnect

F - Type Single Row

Female Plug

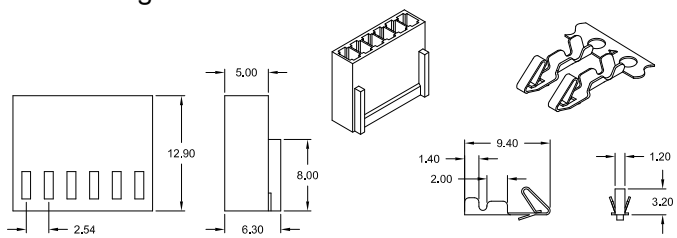

Order Code Housing: CRF-1xx-F254 Contact: CRF-999/28-F254-99

-THT- Male Header straight & right angle

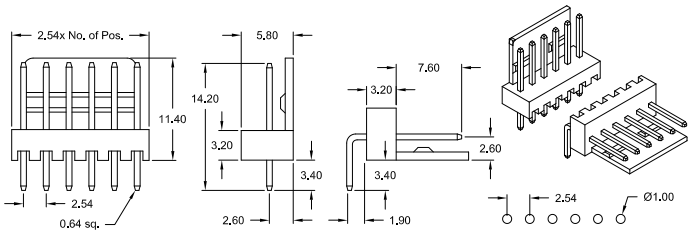

Order Code straight: CRS-1xx-F254-99 right angle: CRR-1xx-F254-99

H - Type Wire to Board Plugs *mating with 2.54mm pitch Pin- / Box-Header*

single row - without bump -

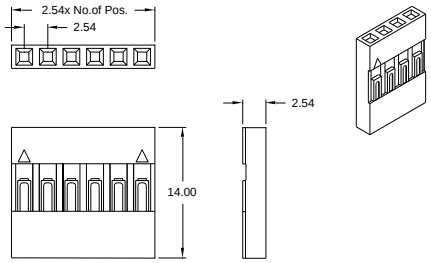

Order Code Housing: CRF-1xx-H254

dual row - without bump -

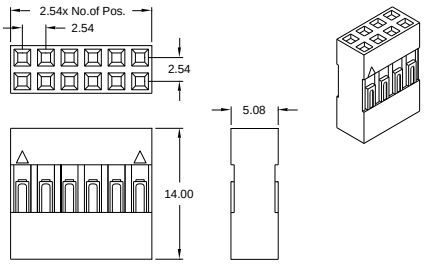

Order Code Housing: CRF-2xx-H254

dual row - with high bump -

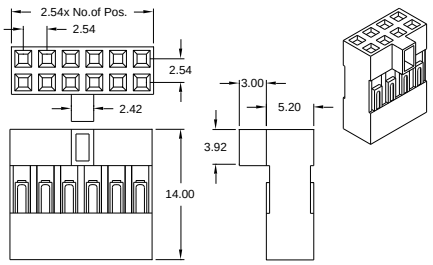

Order Code Housing: CRF-2xx-H254/HP

Female Contact

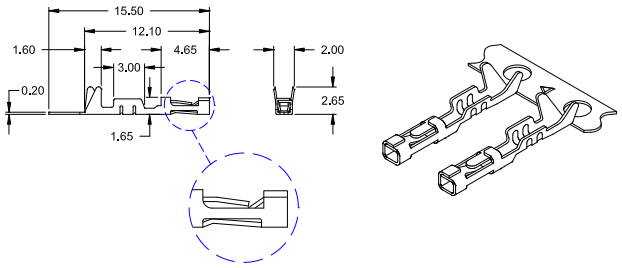

for single row 01 ~ 19 & dual row 06 ~ 18 position

Order Code: CRF-999L/27-H254-95

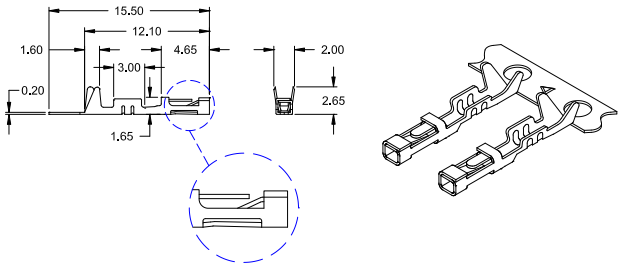

for single row 20 ~ 40 & dual row 20 ~ 80 position

Order Code: CRF-999/27-H254-95

Specifications

Current rating	3 A	Withstanding voltage	800 V AC	Insulator material	F-Type PA66 UL 94V-2
Insulation resistance	1000 MΩ min.	Voltage rating	250 V AC/DC		H Type 1-row: 01 - 40 Pos. NORYL UL 94V-1
Contact resistance	20 mΩ max.	Operating temp.	-25°C to +85°C		H Type 2-row: 06 - 80 Pos. NORYL UL 94V-1
		Contact material	Copper Alloy		

How to order

CR X - x xx - X 254 - xx

Type	Rows	Nbr of Contacts	Execution	Plating
F = Female	**1** = single row	**02 - 20** = F - Type *(except 19)*	**F** = THT & Plug	**99** = Tin
R = R/A Male	**2** = dual row	**01 - 40** = H - Type - 1 row	**H** = Plug	**95** = Tin/Gold
S = Straight Male		**04 - 80** = H - Type - 2 row *if without bump*		
		06 - 80 = H - Type - 2 row *if with bump*		
	if Crimp Contact: **9**	*if Crimp Contact:* *(MOQ: 10K / reel)* *for F- Type:* **99/28** = for AWG 22~30 *for H- Type:* **99X/27** = for AWG 22~28	for details see above drawings	

3.00mm Wire to Board

Crimp Contact "Power Connectors"

RoHS compliant

E-tec Interconnect

W - Type Single Row fully shrouded with polarity protection

-THT- Male Header straight *(top entry)* with locating pegs

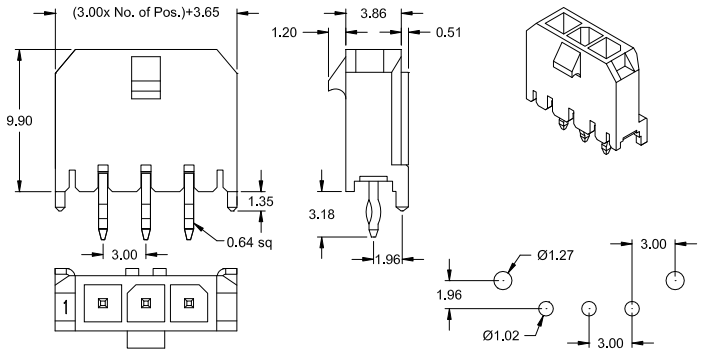

Order Code: PCS-1xx-W300-99

-THT- Male Header straight *(top entry)* with solder clips

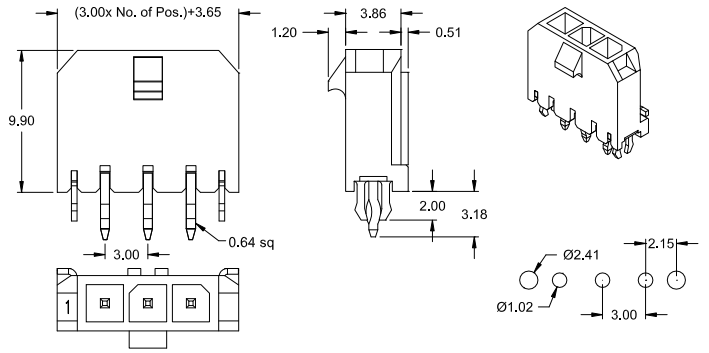

Order Code: PCS-1xx-WC300-99

-SMT- Male Header straight *(top entry)* with solder tabs

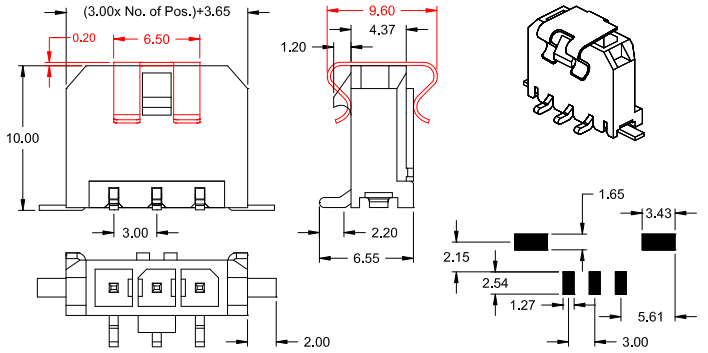

Order Code: PCS-1xx-SW300-99/B

-SMT- Male Header straight *(top entry)* with solder clips

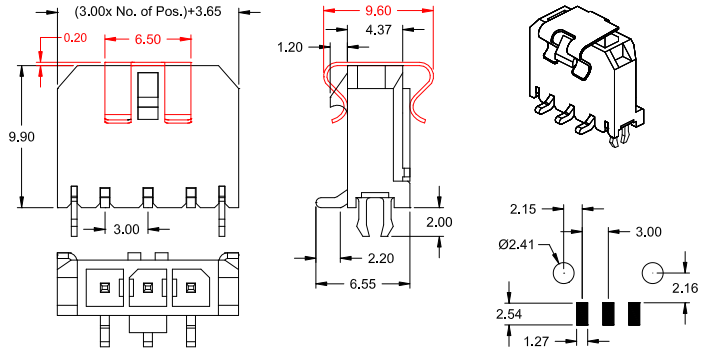

Order Code: PCS-1xx-SC300-99/XX (/B = Standard /LB = Option)

W - Type Female Plug Single Row -Clip lock Type- with polarity protection

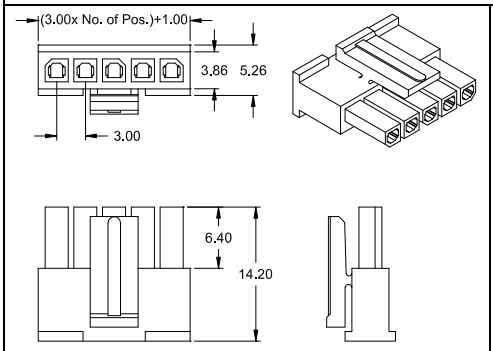

Order Code Housing: PCF-1xx-W300

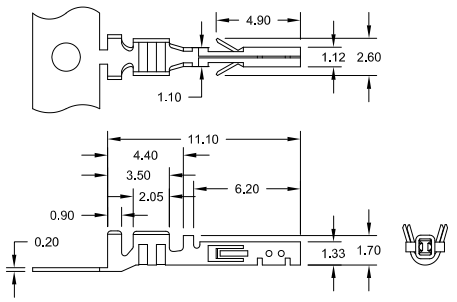

recommended for single row 02~05 position
(mating force 8,2N/contact max.)

Order Code Contact: PCF-999/xx-W300-99

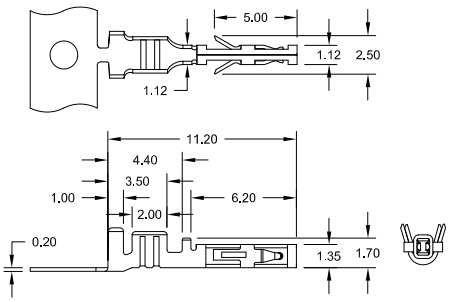

recommended for single row 06~12 position
(mating force 5,0N/contact max.)

Order Code Contact: PCF-999/xxL-W300-99

Specifications

Current rating	5 A if AWG 20	Withstanding voltage	1500 V AC	Contact material	Copper Alloy
Insulation resistance	1000 MΩ min.	Operating temp.	-40°C to +105°C	Insulator material	LCP UL 94V-0
Contact resistance	10 mΩ max.	SMT Processing temp.	+250°C for 5 sec.	PCF Plug	PA66 UL 94V-0
Voltage rating	250 V AC max.			PCB thickness	1.60 mm

How to order

PC X - x xx - X 300 - 99 / X

Type	Rows	Nbr of Contacts	Execution	Plating	Option
F = Female **R** = R/A Male **S** = Straight Male	**1** = single row *if Crimp Contact:* **9**	**02 - 12** = W, WC, SW, SC - Type *if Crimp Contact:* *(MOQ: 10K / reel)* **99/22** = for AWG 20~24 **99/22L** = for AWG 20~24 **99/32** = for AWG 26~30 **99/32L** = for AWG 26~30	**W** = THT & Plug **WC** = THT **SW** = SMT **SC** = SMT for details see above dwg's	**99** = Tin *(leadfree)* other platings on request	**B** = Reel packing with PickUp Cap *-SC300- & -WC300- only:* **LB** = solder clip length 3.20mm; Reel packing with PickUp Cap

3.00mm Wire to Board

Crimp Contact "Power Connectors"

RoHS compliant

E-tec Interconnect

W - Type Single Row fully shrouded with polarity protection

-THT- Male Header right angle *(side entry)* with locating peg

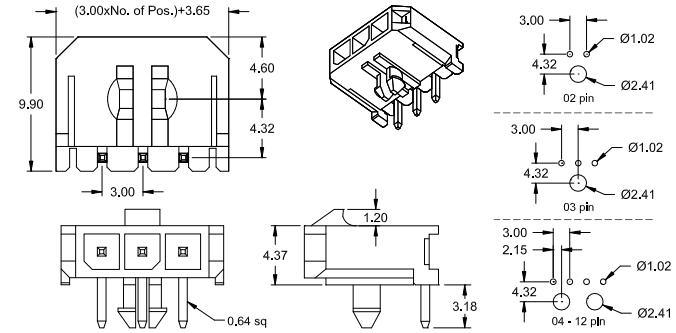

Order Code: PCR-1xx-W300-99

-THT- Male Header right angle *(side entry)* with solder clips

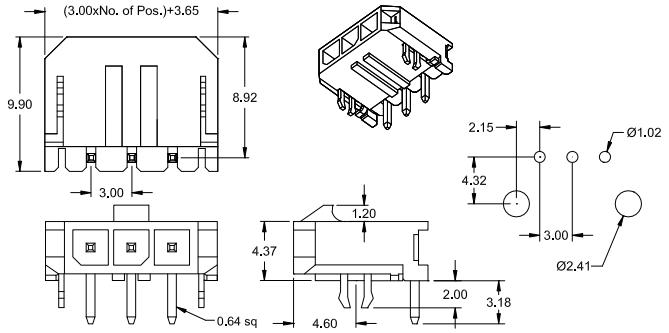

Order Code: PCR-1xx-WC300-99 (/L = Option)

-SMT- Male Header right angle *(side entry)* with solder tabs

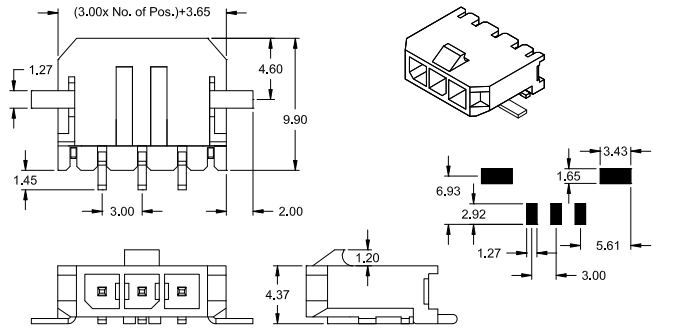

Order Code: PCR-1xx-SW300-99/R

-SMT- Male Header right angle *(side entry)* with solder clips

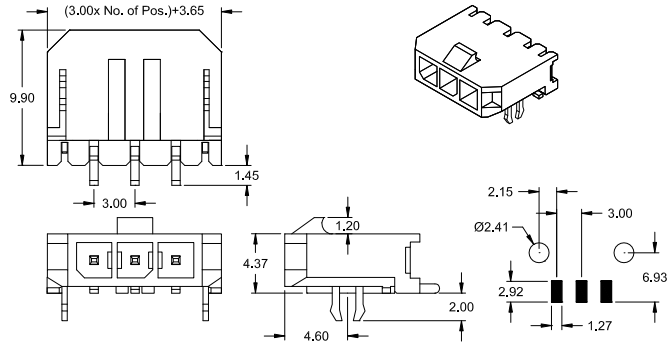

Order Code: PCR-1xx-SC300-99/X (/R = Standard /LR = Option)

W - Type Male Plug Single Row -Clip lock Type- with polarity protection

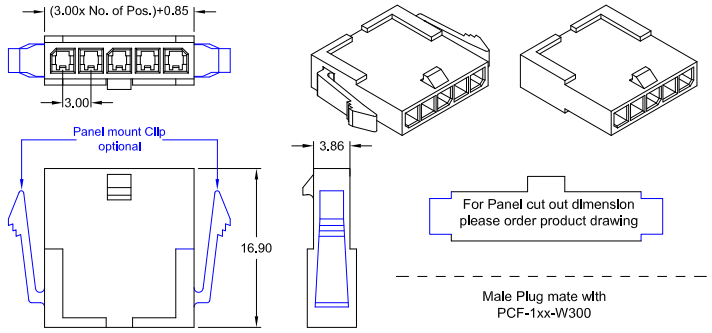

Order Code Housing without Panel mount Clip: PCM-1xx-WN300

Order Code Housing with Panel mount Clip: PCM-1xx-W300

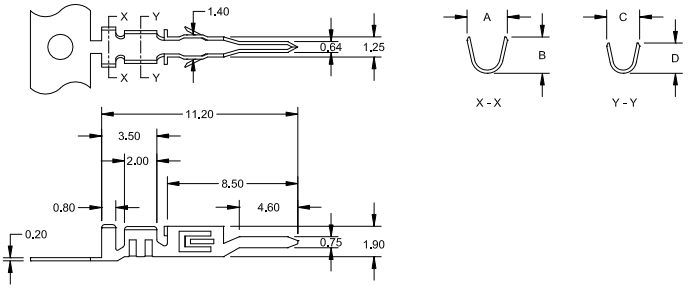

Crimp Contact Order Code	Wire range	Dimension mm			
		A	B	C	D
PCM-999/22-W300-99	AWG 20 ~ 24	2.70	2.40	2.10	2.10
PCM-999/32-W300-99	AWG 26 ~ 30	2.40	1.90	1.80	1.60

Specifications

Current rating	5 A if AWG 20	Withstanding voltage	1500 V AC	Contact material	Phosphor Bronze
Insulation resistance	1000 MΩ min.	Operating temp.	-40°C to +105°C	Insulator material	LCP UL 94V-0
Contact resistance	10 mΩ max.	SMT Processing temp.	+250°C for 5 sec.	PCM Type	PA66 UL 94V-0
Voltage rating	250 V AC max.			PCB thickness	1.60 mm

How to order

PC X - x xx - X 300 - 99 / X

Type	Rows	Nbr of Contacts	Execution	Plating	Option
M = Male **R** = R/A Male **S** = Straight Male	**1** = single row *if Crimp Contact:* **9**	**02** to **12** *if Crimp Contact:* *(MOQ: 10K / reel)* **99/22** = for AWG 20~24 **99/32** = for AWG 26~30	**W** = THT & Plug **WC** = THT **WN** = Plug **SC** = SMT **SW** = SMT for details see above dwg's	**99** = Tin *(leadfree)* other platings on request	**R** = Reel packing *-SC300- & -WC300- only:* **L** = solder clip length 3.20mm

3.00mm Wire to Board

Crimp Contact "Power Connectors"

RoHS compliant

E-tec Interconnect

W - Type Dual Row fully shrouded with polarity protection

-THT- Male Header straight *(top entry)*

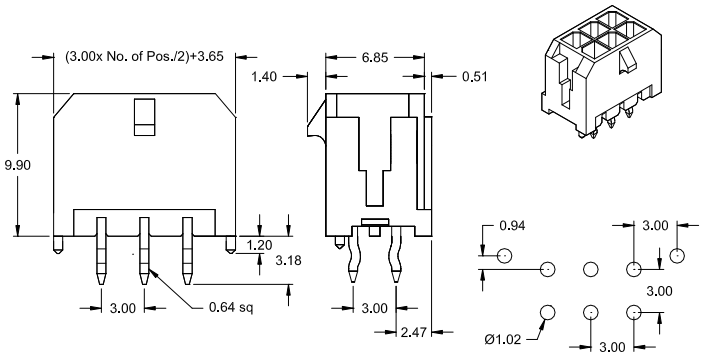

Order Code: PCS-2xx-W300-99

-THT- Male Header right angle *(side entry)*

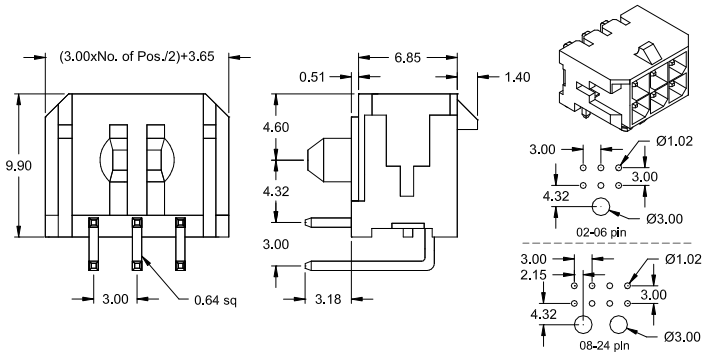

Order Code: PCR-2xx-W300-99

-SMT- Male Header straight *(top entry)* with solder tabs

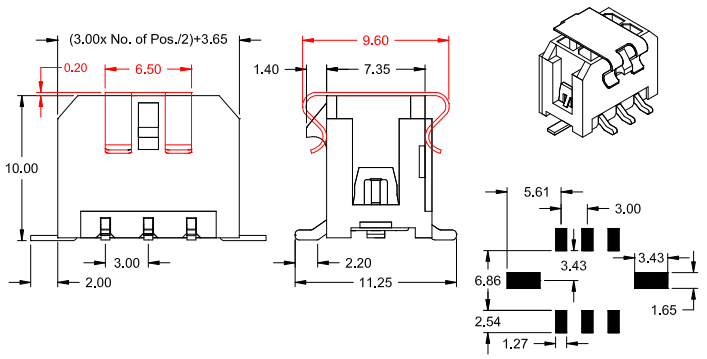

Order Code: PCS-2xx-SW300-99/B

-SMT- Male Header straight *(top entry)* with solder clips

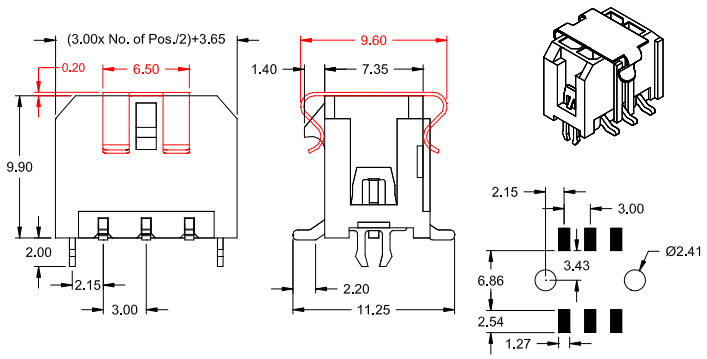

Order Code: PCS-2xx-SC300-99/XX (/B = Standard /LB = Option)

W - Type Female Plug Dual Row -Clip lock Type- with polarity protection

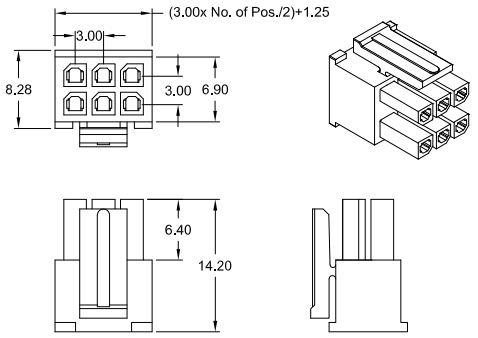

Order Code Housing: PCF-2xx-W300

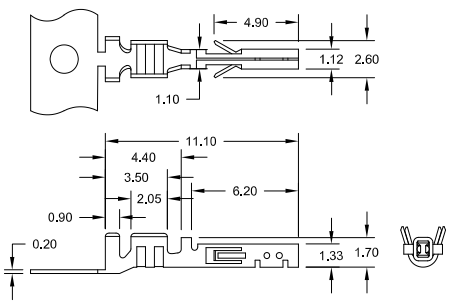

recommended for dual row 02~10 position
(mating force 8,2N/contact max.)

Order Code Contact: PCF-999/xx-W300-99

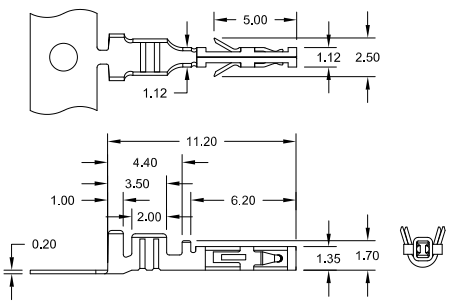

recommended for dual row 12~24 position
(mating force 5,0N/contact max.)

Order Code Contact: PCF-999/xxL-W300-99

Specifications

Current rating	5 A if AWG #20
Insulation resistance	1000 MΩ min.
Contact resistance	10 mΩ max.
Voltage rating	250 V AC max.

Withstanding voltage	1500 V AC
Operating temp.	-40°C to +105°C
SMT Processing temp.	+250°C for 5 sec.

Contact material		Copper Alloy
Insulator material	PCF	PA66 UL 94V-0
	PCS & PCR	PA9T UL 94V-0
	SW & SC Type	LCP UL 94V-0
PCB thickness		1.60 mm

How to order

PC X - x xx - X 300 - 99 / X

Type	Rows	Nbr of Contacts	Execution	Plating	Option
F = Female **R** = R/A Male **S** = Straight Male	**2** = dual row *if Crimp Contact:* **9**	**02 - 24** = W, SW, SC - Type *if Crimp Contact:* *(MOQ: 10K / reel)* **99/22** = for AWG 20~24 **99/22L** = for AWG 20~24 **99/32** = for AWG 26~30 **99/32L** = for AWG 26~30	**W** = THT & Plug **SW** = SMT **SC** = SMT for details see above dwg's	**99** = Tin *(leadfree)* other platings on request	**B** = Reel packing with PickUp Cap *PCS-2xx-SC300-99/XX only:* **LB** = solder clip length 3.20mm; Reel packing with PickUp Cap

3.00mm Wire to Board

Crimp Contact "Power Connectors"

RoHS compliant

E-tec Interconnect

W - Type Dual Row fully shrouded with polarity protection

-SMT- Male Header right angle *(side entry)* with solder tabs

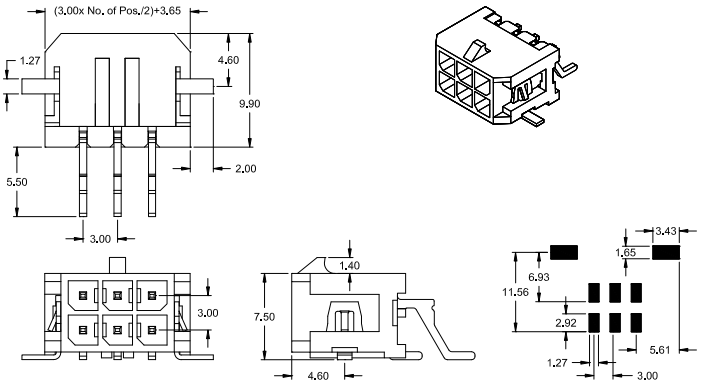

Order Code: PCR-2xx-SW300-99/R

-SMT- Male Header right angle *(side entry)* with solder clips

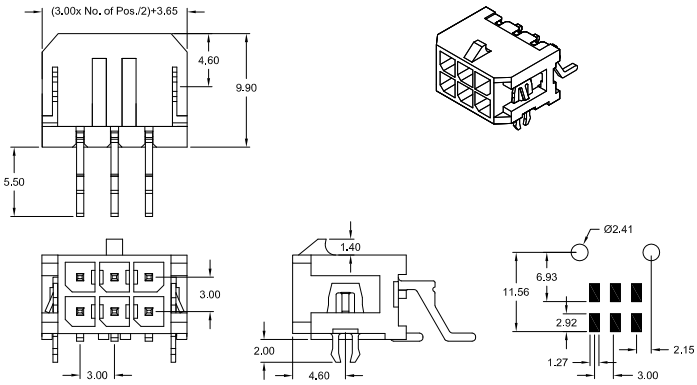

Order Code: PCR-2xx-SC300-99/X (/R = Standard /LR = Option)

W - Type Male Plug Dual Row -Clip lock Type- with polarity protection

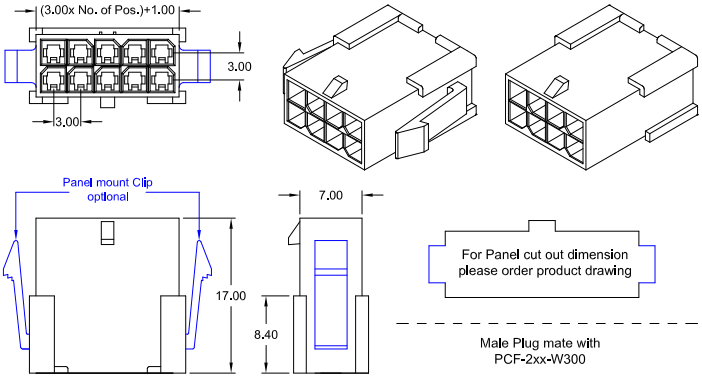

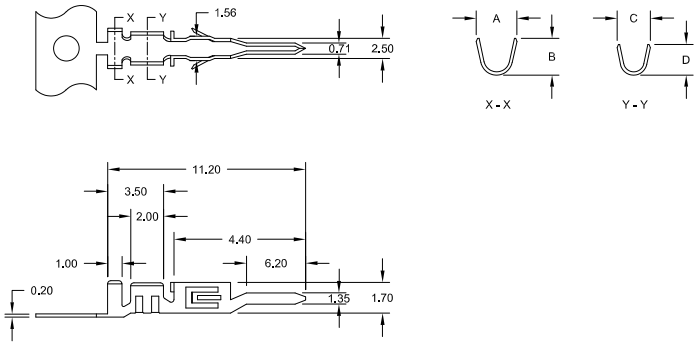

Crimp Contact Order Code	Wire range	Dimension mm			
		A	B	C	D
PCM-999/22-W300-99	AWG 20 ~ 24	2.70	2.40	2.10	2.10
PCM-999/32-W300-99	AWG 26 ~ 30	2.40	1.90	1.80	1.60

Order Code Housing without Panel mount Clip: PCM-2xx-WN300

Order Code Housing with Panel mount Clip: PCM-2xx-W300

Specifications

Current rating	5 A if AWG 20	Withstanding voltage	1500 V AC	Contact material	Phosphor Bronze
Insulation resistance	1000 MΩ min.	Operating temp.	-40°C to +105°C	Insulator material	LCP UL 94V-0
Contact resistance	10 mΩ max.	SMT Processing temp.	+250°C for 5 sec.	PCM Type	PA66 UL 94V-0
Voltage rating	250 V AC max.			PCB thickness	1.60 mm

How to order

PC X - x xx - X 300 - 99 / X

Type	Rows	Nbr of Contacts	Execution	Plating	Option
M = Male **R** = R/A Male	**2** = dual row *if Crimp Contact:* **9**	**04** to **24** *if Crimp Contact:* *(MOQ: 10K / reel)* **99/22** = for AWG 20~24 **99/32** = for AWG 26~30	**W** = Plug **WN** = Plug **SC** = SMT **SW** = SMT for details see above dwg's	**99** = Tin *(leadfree)* other platings on request	**R** = Reel packing *PCR-2xx-SC300-99/X only:* **L** = solder clip length 3.20mm

3.00mm Wire to Board "Blind Mate" Crimp Contact "Power Connectors"

RoHS compliant

E-tec Interconnect

BF - Type Female Plug Dual Row with polarity protection

-THT- straight

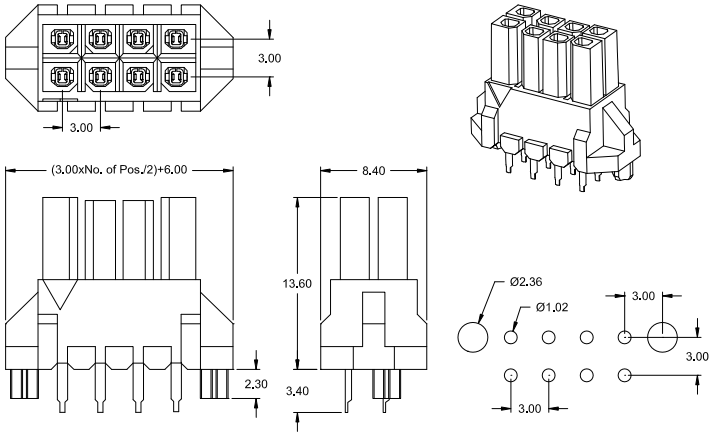

Order Code: PCS-2xx-BF300-99

-THT- right angle

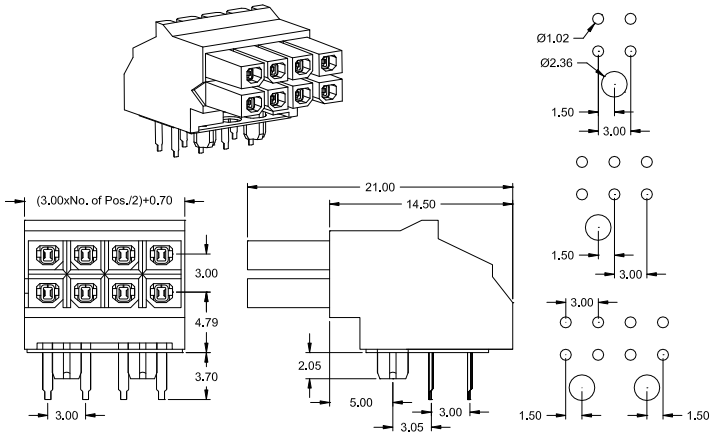

Order Code: PCR-2xx-BF300-99

BM - Type Male Header Dual Row fully shrouded with polarity protection

-THT- straight *(top entry)*

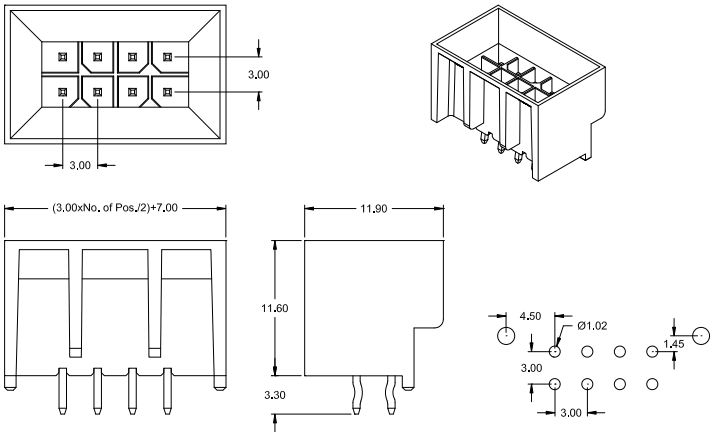

Order Code: PCS-2xx-BM300-99

-THT- right angle *(side entry)*

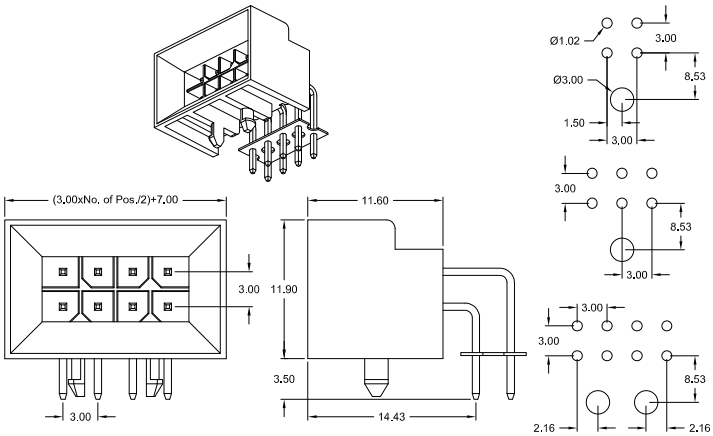

Order Code: PCR-2xx-BM300-99

Specification

Current rating	5 A	Voltage rating	250 V AC max.	Contact material	Copper alloy
Insulation resistance	1000 MΩ min.	Withstanding voltage	1500 V AC	Insulator material	LCP UL 94V-0
Contact resistance	10 mΩ max.	Operating temp.	-40°C to +105°C	PCB thickness	1.60 mm

How to order

PC X - 2 xx - XX 300 - 99

Type	Rows	Nbr of Contacts	Execution	Plating
R = Right angle **S** = Straight	**2** = dual row	**04** to **24**	**BF** = Female **BM** = Male for details see above dwg's	**99** = Tin *(leadfree)* other platings on request

3.96mm Wire to Board

Crimp Contact & IDC Power Connectors

RoHS compliant

E-tec Interconnect

F - Type "Friction Lock" Single Row

Female Plug

AWG 18~24

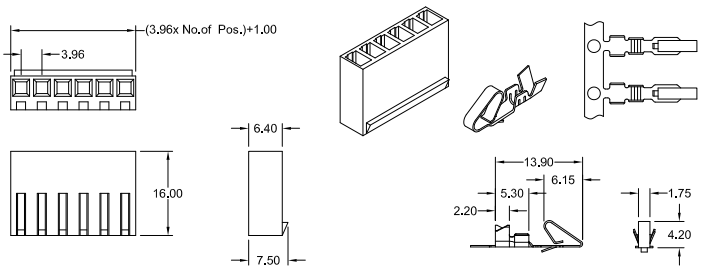

Order Code Housing: PCF-1xx-F396 Contact: PCF-999/20-F396-99

-THT- Male Header straight & right angle

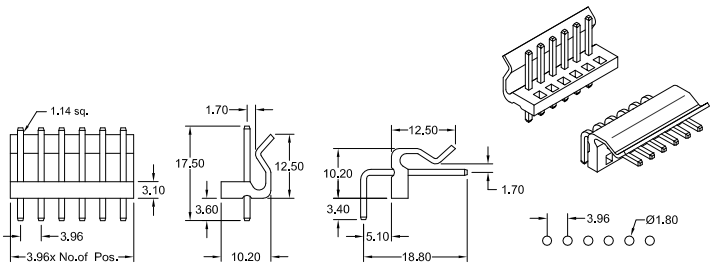

Order Code straight: PCS-1xx-F396-99 right angle: PCR-1xx-F396-99

Q - Type "Quick Lock" Single Row

Female Plug

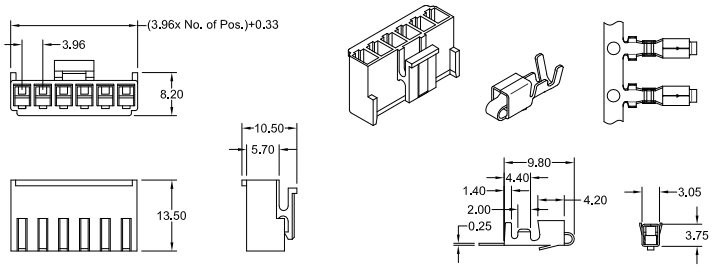

Order Code Housing: PCF-1xx-Q396 Contact: PCF-999/xx-Q396-99

-THT- Male Header straight & right angle

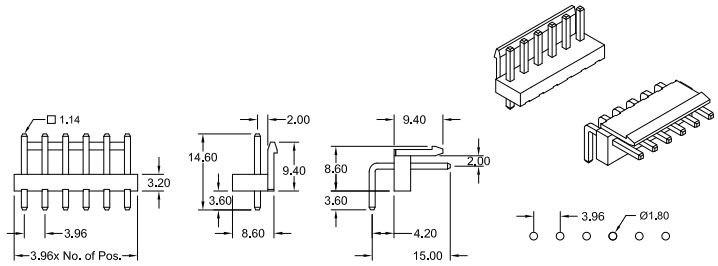

Order Code straight: PCS-1xx-Q396-99 right angle: PCR-1xx-Q396-99

P - Type IDC "Friction Lock" Single Row

Female Plug

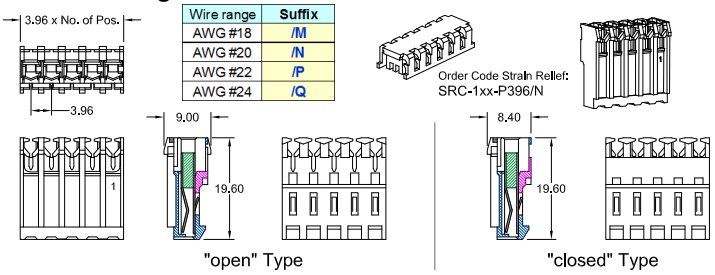

Wire range	Suffix
AWG #18	/M
AWG #20	/N
AWG #22	/P
AWG #24	/Q

Order Code Strain Relief: SRC-1xx-P396/N

Order Code: IDF-1xx/X-P396-99 IDF-1xx/X -PC396-99

-THT- Male Header straight & right angle

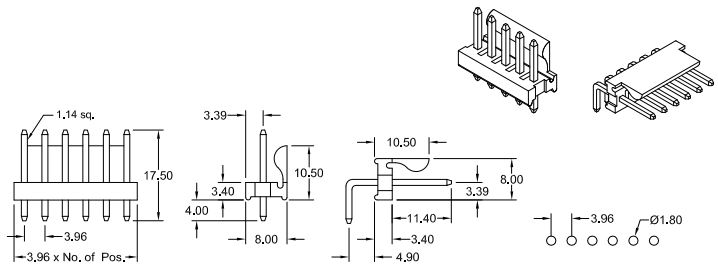

Order Code straight: PCS-1xx-P396-99 right angle: PCR-1xx-P396-99

Specifications

Current rating	F- & Q-Type	7 A
	P-Type	4 A (UL) 5A (CSA)
Insulation resistance		1000 MΩ min.
Contact resistance		20 mΩ max.

Voltage rating	250 V AC max.
Withstanding voltage	1500 V AC
Operating temperature	-20°C to +85°C

Contact material	Copper Alloy
Insulator material	PA66 UL 94V-2
Q Type	PA66 UL 94V-0
PCB thickness	1.60 mm

How to order

XXX - x xx - X 396 - 99

Type	Rows	Nbr of Contacts	Execution	Plating
PCF = Female	**1** = single row	**02 - 16** = F - Type	**F** = Friction Lock Type	**99** = Tin (leadfree)
PCR = R/A Male	*if Crimp Contact:* **9**	**02 - 28** = P - Type	**P** = IDC "open" Type	
PCS = Straight Male		**02 - 15** = Q - Type	**PC** = IDC "closed" Type	
IDF = IDC Female		*if Crimp Contact for Q-Type:* **99/19** = for AWG 18~22	**Q** = Quick Lock Type	
		99/16 = for AWG 16~20		
		MOQ: F-Type = 6K / reel, Q-Type = 4K / reel	for details see above dwg's	other platings on request

4.20mm Wire to Board

Crimp Contact "Power Connectors"

RoHS compliant

E-tec Interconnect

P - Type Single Row fully shrouded with polarity protection

-THT- Male Header straight *(top entry)* with & w/o board lock clips

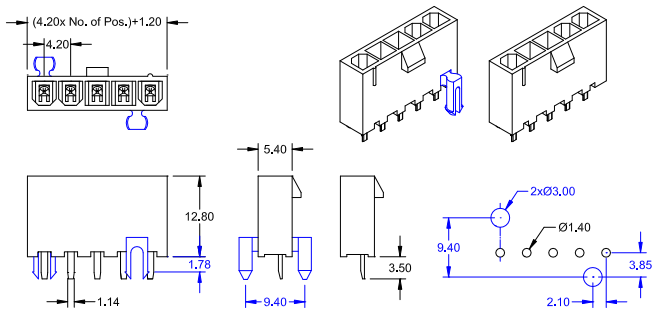

Order Code: PCS-1xx-P420-99 PCS-1xx-PN420-99

-THT- Male Header right angle *(side entry)* with board lock clips

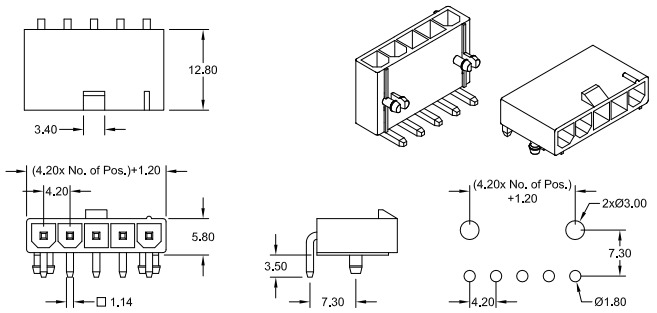

Order Code: PCR-1xx-P420-99

-THT- Male Header right angle *(side entry)*

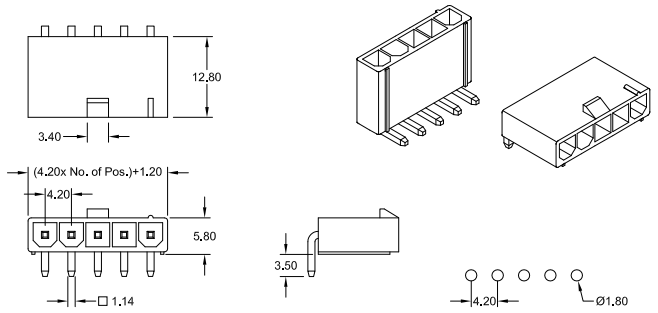

Order Code: PCR-1xx-A420-99

-THT- Male Header right angle *(side entry)* with mounting ears

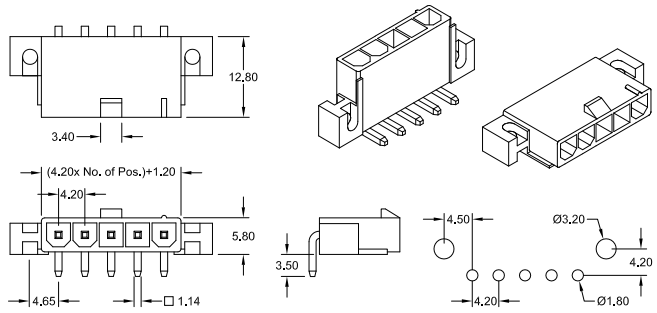

Order Code: PCR-1xx-W420-99

P - Type Female Plug Single Row -Clip lock Type- with polarity protection

mate with -P420-, -A420- & -W420- Male Header

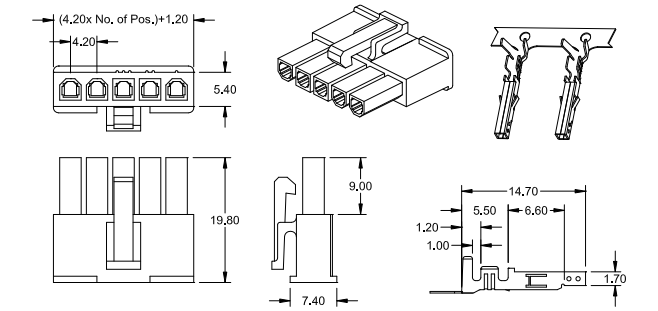

Order Code Housing: PCF-1xx-P420 Contact: PCF-999/xxX-P420-99

Current rating @30°C:
(dependant on number of contacts and wire size)

Wire Size AWG	Contacts			
	02 ~ 03	04 ~ 06	07 ~ 10	11 ~ 12
#16	9A	8A	7A	6A
#18	9A	8A	7A	6A
#20	7A	6A	5A	5A
#22	5A	4A	4A	4A
#24	4A	3A	3A	3A
#26	3A	2A	2A	2A
#28	2A	1A	1A	1A

Specifications

Current rating	pls. see box above	Voltage rating	600 V AC/DC	Contact material	Brass or PhBz
Insulation resistance	1000 MΩ min.	Withstanding voltage	1500 V AC	Insulator material	PA66 UL 94V-2
Contact resistance	20 mΩ max.	Operating temperature	-25°C to +85°C	PCB thickness	1.60 mm

How to order

PC X - x xx - X 420 - 99

Type	Rows	Nbr of Contacts	Execution	Plating
F = Female **R** = R/A Male **S** = Straight Male	**1** = single row *if Crimp Contact:* **9**	**02 - 12** = P, A & W - Type *if Crimp Contact:* *(MOQ: 5K / reel)* *if Brass:* **99/27** = for AWG 22~28 **99/20** = for AWG 18~24 **99/14** = for AWG 16 *if Phosphor Bronze:* **99/27P** = for AWG 22~28 **99/20P** = for AWG 18~24 **99/14P** = for AWG 16	**P** = with board lock clips **PN** = without board lock clips **A** = without mounting ears **W** = with mounting ears for details see above dwg's	**99** = Tin *(leadfree)* other platings on request

4.20mm Wire to Board

Crimp Contact "Power Connectors"

RoHS compliant

E-tec Interconnect

P - Type Dual Row fully shrouded with polarity protection

-THT- Male Header straight *(top entry)* with board lock clips

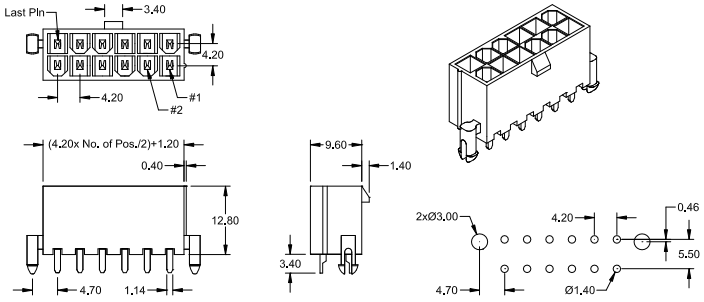

Order Code: PCS-2xx-P420-99

-THT- Male Header straight *(top entry)* without board lock clips

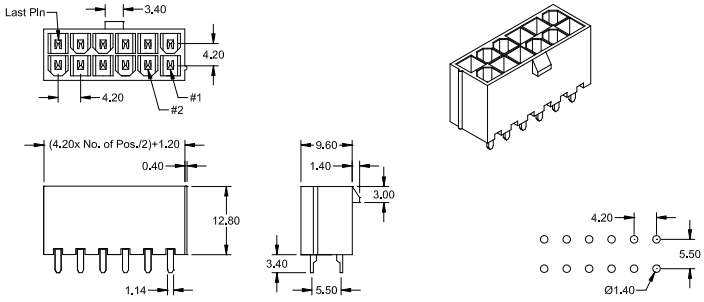

Order Code: PCS-2xx-PN420-99

-THT- Male Header right angle *(side entry)* with mounting ears

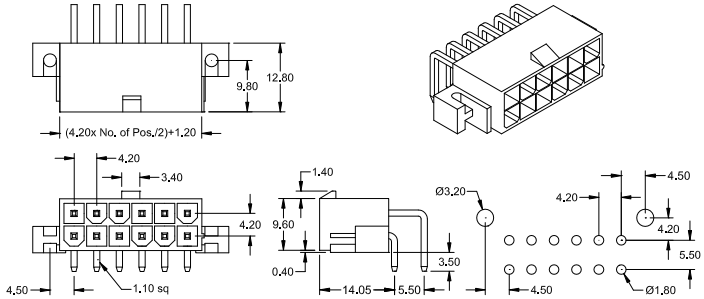

Order Code: PCR-2xx-W420-99

-THT- Male Header right angle *(side entry)* with board lock clips

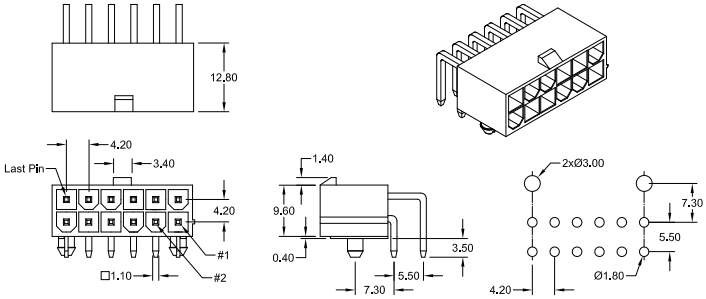

Order Code: PCR-2xx-P420-99

P - Type Female Plug Dual Row -Clip lock Type- with polarity protection

mate with -P420- & -W420- Male Header

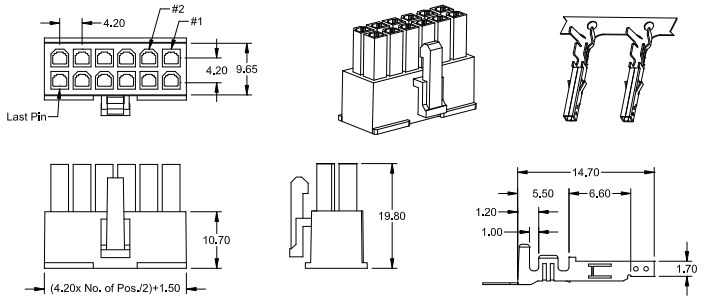

Order Code Housing: PCF-2xx-P420 Contact: PCF-999/xxX-P420-99

Current rating @30°C:
(dependant on number of contacts and wire size)

Wire Size AWG	Contacts			
	02	04 & 06	08 & 10	12 ~ 24
#18	9A	8A	7A	6A
#20	7A	6A	5A	5A
#22	5A	4A	4A	4A
#24	4A	3A	3A	3A
#26	3A	2A	2A	2A
#28	2A	1A	1A	1A

Specifications

Current rating	pls. see box above	Voltage rating	600 V AC/DC	Contact material	Brass or PhBz
Insulation resistance	1000 MΩ min.	Withstanding voltage	1500 V AC	Insulator material	PA66 UL 94V-2
Contact resistance	20 mΩ max.	Operating temperature	-25°C to +85°C	PCB thickness	1.60 mm

How to order

PC X - x xx - X 420 - 99

Type	Rows	Nbr of Contacts	Execution	Plating
F = Female **R** = R/A Male **S** = Straight Male	**2** = dual row *if Crimp Contact:* **9**	**02 - 24** = P & W - Type *if Crimp Contact:* *(MOQ: 5K / reel)* *if Brass:* **99/27** = for AWG 22~28 **99/20** = for AWG 18~24 **99/14** = for AWG 16 *if Phosphor Bronze:* **99/27P** = for AWG 22~28 **99/20P** = for AWG 18~24 **99/14P** = for AWG 16	**P** = with board lock clips **PN** = without board lock clips **W** = with mounting ears for details see above dwg's	**99** = Tin *(leadfree)* other platings on request

4.20mm Wire to Board

Crimp Contact "Power Connectors"

RoHS compliant

E-tec Interconnect

P - Type Male Plug Single & Dual Row

Single Row Housing with & without -Panel Clip lock-

mate with PCF-1xx-P420

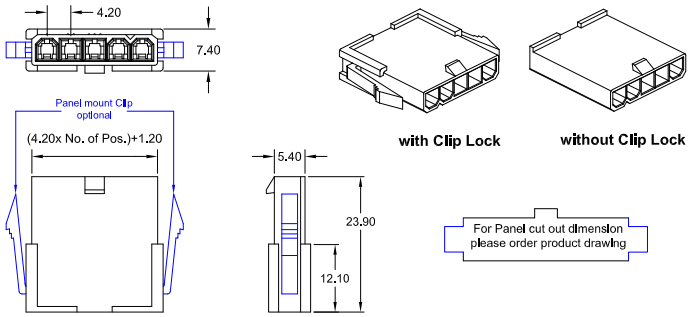

Order Code with Panel Clip lock: PCM-1xx-P420

Order Code without Panel Clip lock: PCM-1xx-PN420

Dual Row Housing with & without -Panel Clip lock-

mate with PCF-2xx-P420

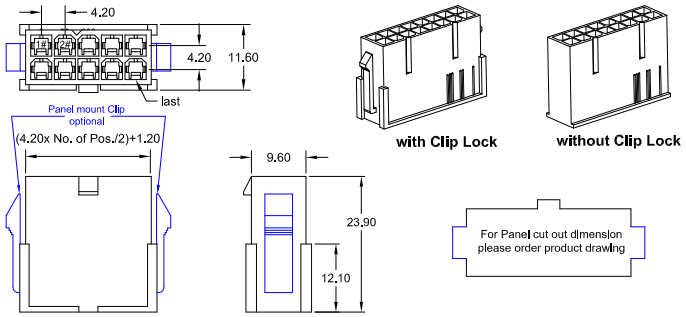

Order Code with Panel Clip lock: PCM-2xx-P420

Order Code without Panel Clip lock: PCM-2xx-PN420

Male Contact

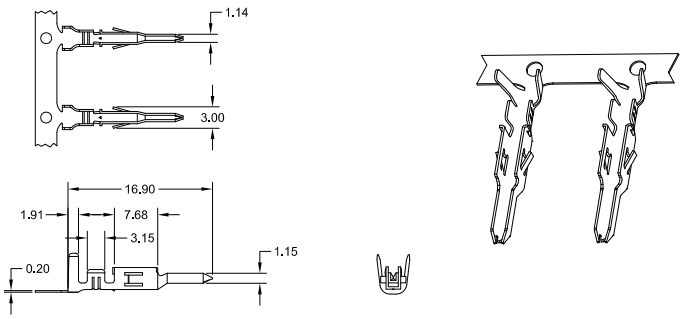

Order Code: PCM-999/xxX-P420-99

Current rating @30°C:

(dependant on number of contacts and wire size)

Wire Size AWG	Contacts 02 ~ 03	04 ~ 06	07 ~ 10	11 ~ 24
#16	9A	8A	7A	6A
#18	9A	8A	7A	6A
#20	7A	6A	5A	5A
#22	5A	4A	4A	4A
#24	4A	3A	3A	3A
#26	3A	2A	2A	2A
#28	2A	1A	1A	1A

Specifications

Current rating	pls. see box above	Voltage rating	600 V AC max.	Contact material	Copper alloy
Insulation resistance	1000 MΩ min.	Withstanding voltage	1500 V AC	Insulator material	PA66 UL 94V-2
Contact resistance	20 mΩ max.	Operating temp.	-40°C to +105°C	PCB Thickness	2.00 mm max.

How to order

PCM - x xx - X 420 - 99

Rows

1 = single row

2 = dual row

if Crimp Contact:

9

Nbr of Contacts

02 - 12 = P & PN – Type single row

02 - 24 = P & PN – Type dual row

if Crimp Contact: *(MOQ: 5K / reel)*

if Brass (standard):

99/27 = for AWG 22~28

99/20 = for AWG 18~24

99/14 = for AWG 16

if Phosphor Bronze (on request):

99/27P = for AWG 22~28

99/20P = for AWG 18~24

99/14P = for AWG 16

Execution

P = with panel Clip lock

PN = without panel Clip lock

for details see above dwg's

Plating

99 = Tin *(leadfree)*

other platings on request

4.20mm Wire to Board "Blind Mate" Crimp Contact "Power Connectors"

RoHS compliant

E-tec Interconnect

BM - Type Male Header Dual Row fully shrouded with polarity protection

-THT- straight *(top entry)*

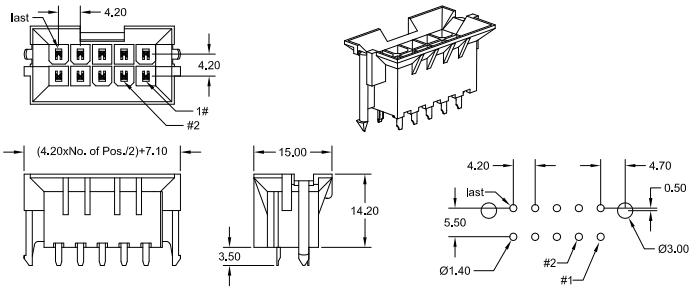

Order Code: PCS-2xx-BM420-99

-THT- right angle *(side entry)*

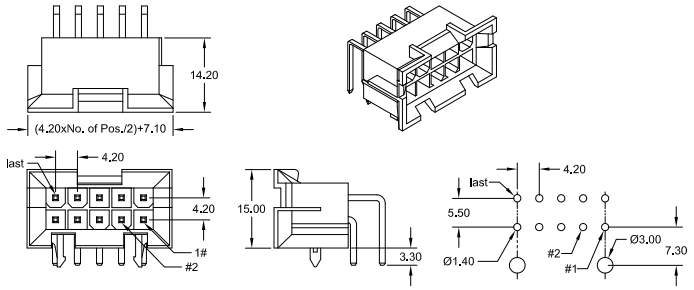

Order Code: PCR-2xx-BM420-99

BF - & BSC - Type Female Dual Row with polarity protection

-THT- straight

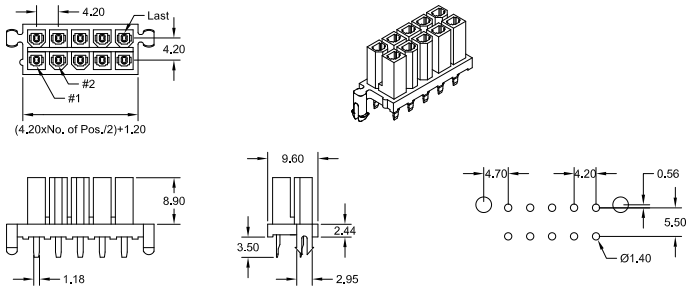

Order Code: PCS-2xx-BF420-99

Dual Row Female Plug Housing panel mount Clip lock Type

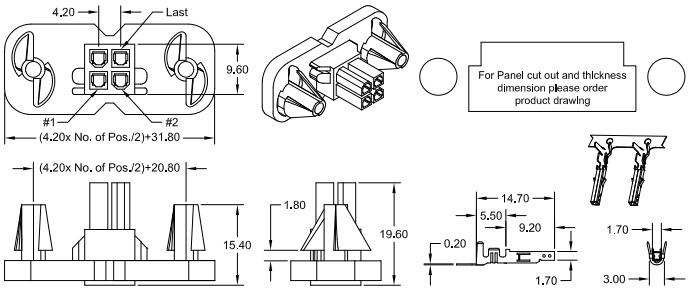

Order Code: PCF-2xx-BSC420 Contact: PCF-999/xxX-P420-99

BC - Type Male Plug Housing Dual Row panel mount Clip lock Type

mate with PCF-2xx-P420

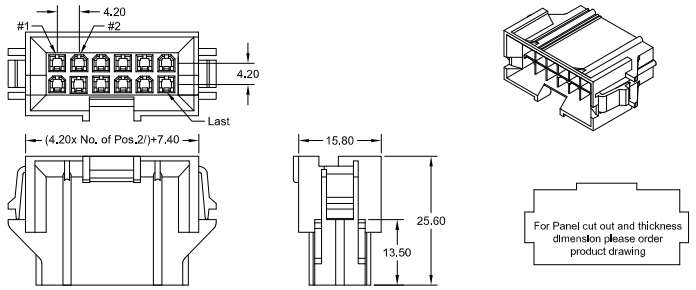

Order Code: PCM-2xx-BC420

Male Contact

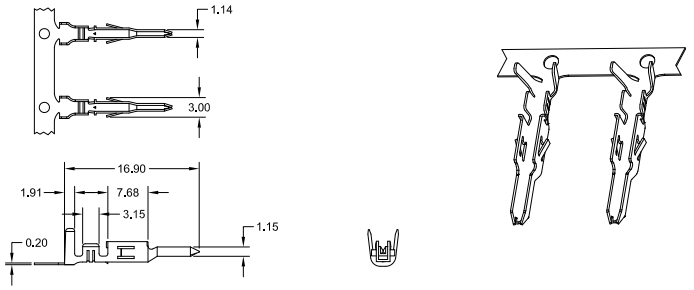

Order Code: PCM-999/xxX-P420-99

Specifications

Current rating	pls. see box page 133-1	Voltage rating	600 V AC max.	Contact material	Copper alloy
Insulation resistance	1000 MΩ min.	Withstanding voltage	1500 V AC	Insulator material	PA66 UL 94V-2
Contact resistance	20 mΩ max.	Operating temp.	-40°C to +105°C	PCB / Panel thickness	1.80 mm max.

How to order

PC X - x xx - X 420 - 99

Type

- **F** = Female
- **M** = Male
- **R** = Right angle
- **S** = Straight

Rows

- **2** = dual row

if Crimp Contact:

- **9**

Nbr of Contacts

- **02 - 24** = BC, BF, BM & BSC –Type

if Crimp Contact: *(MOQ: 5K / reel)*

if Brass (standard):

- **99/27** = for AWG 22~28
- **99/20** = for AWG 18~24
- **99/14** = for AWG 16

if Phosphor Bronze (on request):

- **99/27P** = for AWG 22~28
- **99/20P** = for AWG 18~24
- **99/14P** = for AWG 16

Execution

- **BC** = Male Plug Housing
- **BF** = THT Female
- **BM** = THT Male
- **P** = Male Contact

for details see above dwg's

Plating

- **99** = Tin *(leadfree)*

other platings on request

5.08mm Wire to Board

Crimp Contact & IDC Power Connectors

RoHS compliant

E-tec Interconnect

F - Type "Friction Lock" Single Row

Female Plug

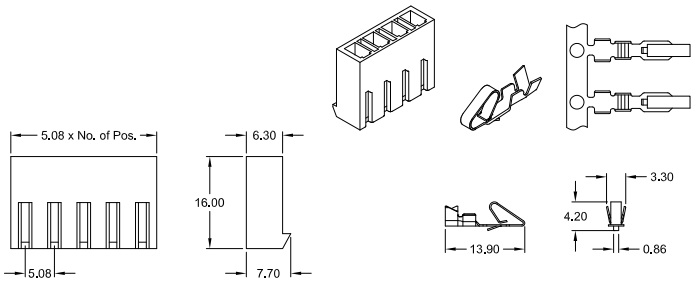

Order Code Housing: PCF-1xx-F508 Contact: PCF-999/20-F508-99

-THT- male header straight & right angle

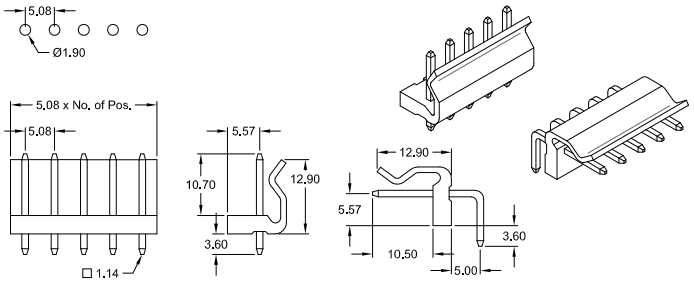

Order Code straight: PCS-1xx-F508-99 right angle: PCR-1xx-F508-99

Disc Drive Power Connector

P - Type 2, 3 & 4 Crimp Contact - Female Plug

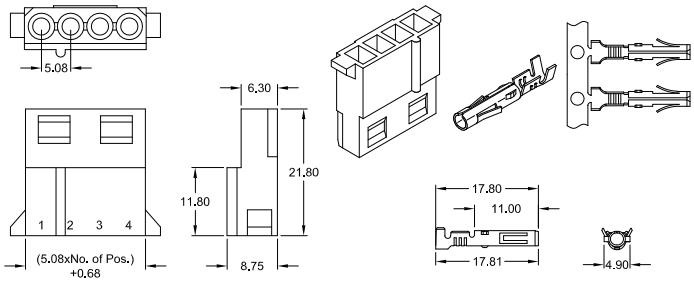

Order Code Housing: PCF-1xx-P508

Contact: PCF-999/16-P508-99 or PCF-999/19-P508-99

I - Type IDC - Female Plug (AWG 18~20)

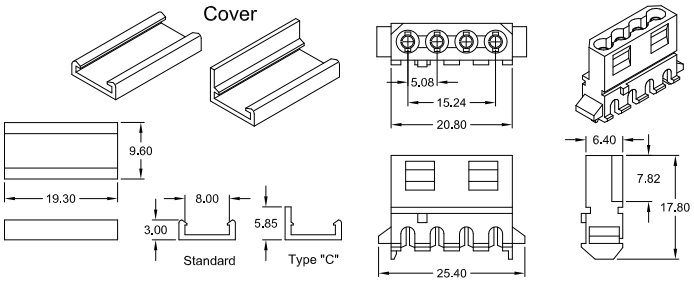

Order Code with standard Cover: PCF-104-I508-99

with Type "C" Cover: PCF-104-I508-99/C

C - Type 2, 3 & 4 Crimp Contact - Male Plug

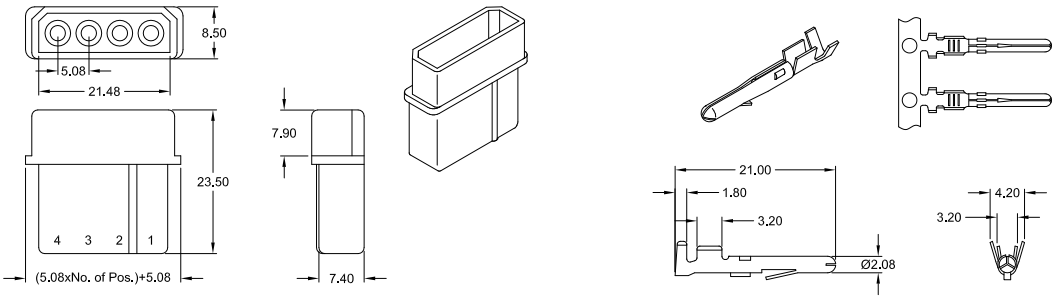

Order Code Housing: PCM-1xx-C508 Contact: PCM-999/19-C508-99

Specifications

Current rating	7 A	Voltage rating	250 V AC max.	Contact material	Copper Alloy
Insulation resistance	1000 MΩ min.	Withstanding voltage	1500 V AC	Insulator material	PA66 UL 94V-2
Contact resistance	20 mΩ max.	Operating temperature	-40°C to +105°C	PCB thickness	1.60 mm

How to order

PC X - x xx - X 508 - 99

Type	Rows	Nbr of Contacts	Execution	Plating
F = Female	**1** = single row	**02 - 10** = F - Type	**F** = THT & Plug	**99** = Tin (leadfree)
R = R/A Male		**02, 03 & 04** = P & C – Type	**P** = Plug	
S = Straight Male		**04** = I - Type	**I** = Plug	
M = Male contact & Header	*if Crimp Contact:* **9**	*if Crimp Contact:* **99/20** = for AWG 18~24	**C** = Plug	
		99/19 = for AWG 18~22		
		99/16 = for AWG 16~20		
		MOQ: P- & C- Type = 6K / reel	for details see above dwg's	other platings on request
		F - Type = 7K / reel		

5.08mm Power Connectors
Disk Drive Power Connection System

RoHS compliant

E-tec Interconnect

4 Contact Male - Through Board Solder Types

Straight "T" type

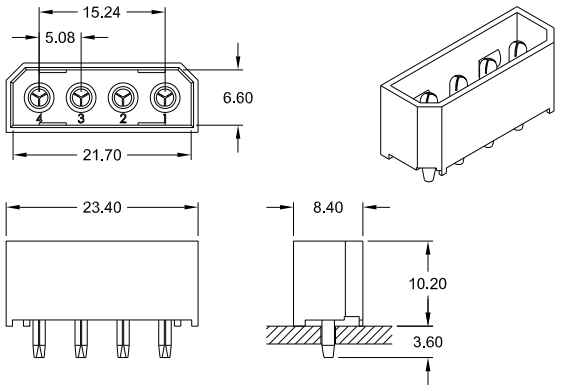

Order Code: PCS-104-T508-99

Right angle "T" type

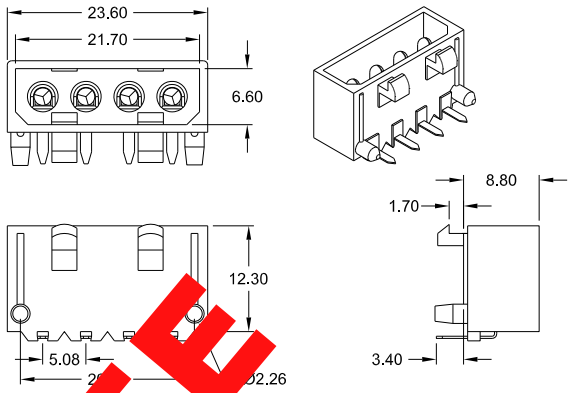

Order Code: PCR-104-T508-99

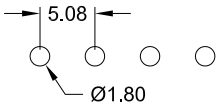

PCB Hole Layout

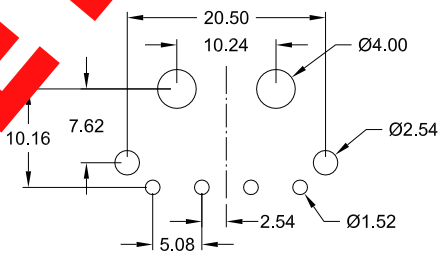

PCB Hole Layout

OBSOLETE

SPECIFICATIONS

Current rating	7 A	Contact resistance	20 mΩ max.	Contact material	Copper alloy
Insulator resistance	1000 MΩ min.	Withstanding voltage	1500 V AC	Insulator material	PA UL 94 V-2
Voltage rating	250 V AC max.	Operating temp.	-25°C to +90°C	PCB Thickness	1.60 mm (.063")

How to order

PC X - 104 - T 508 - 99

Type		
R	=	right angle type
S	=	straight type

Plating		
99	=	Tin (leadfree)

6.35mm Wire to Board

Crimp Contact "Power Connectors"

RoHS compliant

E-tec Interconnect

P - Type "Quick Lock" Single Row

Plug Housing *(load with Female Contact)*

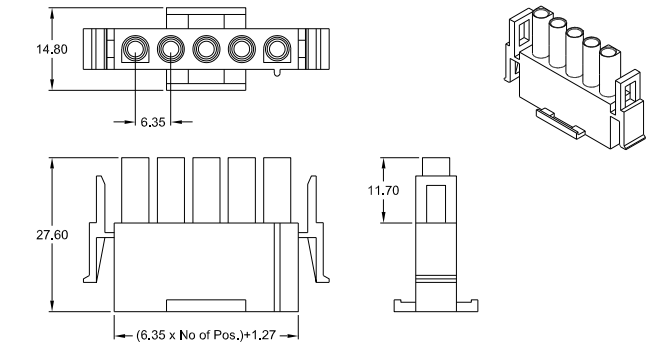

Order Code Housing: PCF-1xx-P635/X

Clutch Housing *(load with Male Contact)*

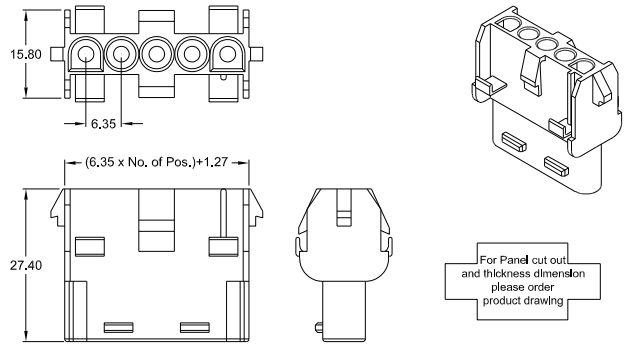

Order Code Housing: PCC-1xx-P635/X

Female Contact

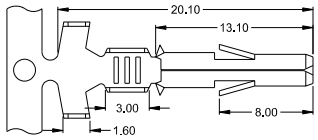

Order Code Contact: PCF-999/xx-P635-99 MOQ: 10K / reel

Male Contact

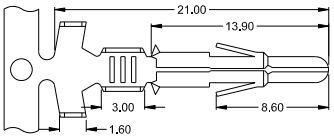

Order Code Contact: PCM-999X/xx-P635-99 MOQ: 10K / reel

Fully Shrouded Header

-THT- Male & Female straight *(top entry)*

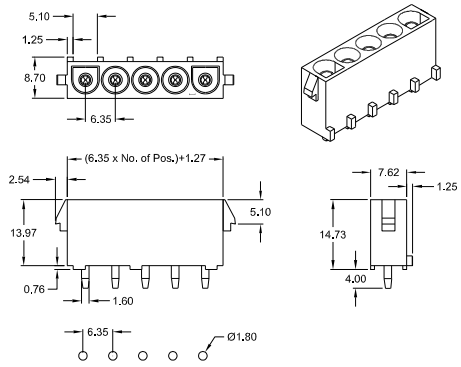

Option Contact Type Order Code

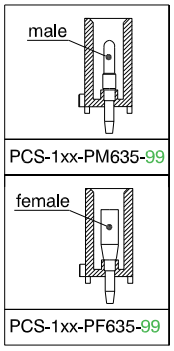

-THT- Male & Female right angle *(side entry)* with mounting ears

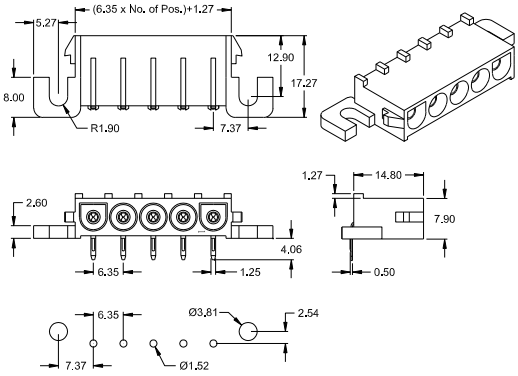

Option Contact Type Order Code

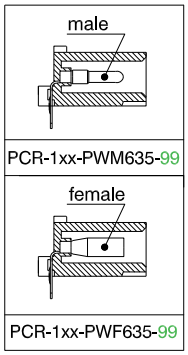

Specifications

Current rating	13 A (5-10 pos. 11 A)	Voltage rating	600 V AC max.	Contact material	Copper Alloy
Insulation resistance	1000 MΩ min.	Withstanding voltage	1000 V AC	Insulator material	PA66 UL 94V-0 & V-2
Contact resistance	20 mΩ max.	Operating temperature	-55°C to +105°C	PCB thickness	1.60mm

How to order

PC X - x xx - X 635 - 99 / X

Type	Rows	Nbr of Contacts	Execution	Plating	Color Option
C = Clutch **F** = Female **M** = Male **R** = Right angle **S** = Straight	**1** = single row *if Crimp Contact:* **9**	**02 - 10** = P, PM, PF, PWM PWF - Execution *if Crimp Contact:* *PCM-Type for 2 to 5 Position:* **99L/10** = for AWG 12~14 **99L/16** = for AWG 16~20 **99L/19** = for AWG 18~22 *PCM-Type for 6 to 10 Position:* *PCF-Type for 2 to 10 Position:* **99/10** = for AWG 12~14 **99/16** = for AWG 16~20 **99/19** = for AWG 18~22	**P** = P - Type **PM** = P - Type male **PF** = P - Type female *PM & PF are with polarizing pin available. Pls. ask for separate datasheet.* **PWM** = PW - Type male **PWF** = PW - Type female for details see above dwg's	**99** = Tin *(leadfree)* other platings on request	**N** = nature (UL 94V-2) **W** = white (UL 94V-0)

6.35mm Wire to Board

Crimp Contact "Power Connectors"

RoHS compliant

E-tec Interconnect

P - Type "Quick Lock" Triple Row

Plug Housing *(load with Female Contact)*

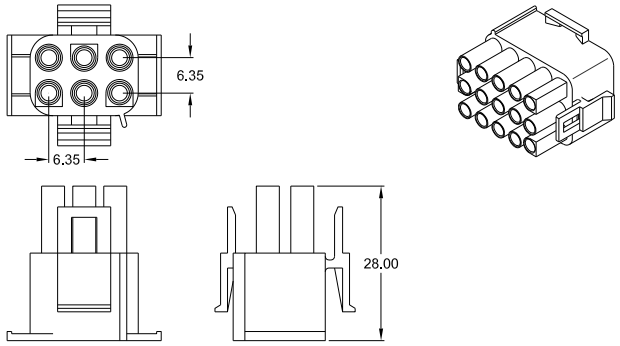

Order Code Housing: PCF-3xx-P635/X

Clutch Housing *(load with Male Contact)*

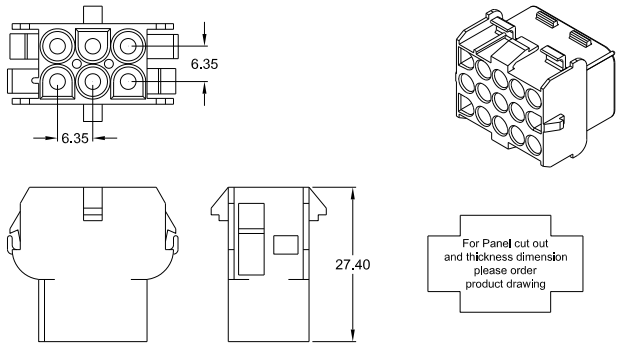

Order Code Housing: PCC-3xx-P635/X

Female Contact

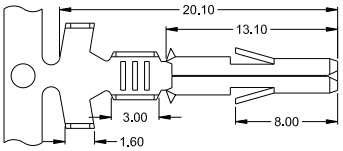

Order Code: PCF-999/xx-P635-99 MOQ: 10K / reel

Male Contact

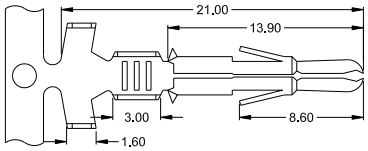

Order Code: PCM-999/xx-P635-99 MOQ: 10K / reel

Fully Shrouded Header

-THT- Female straight *(top entry)*

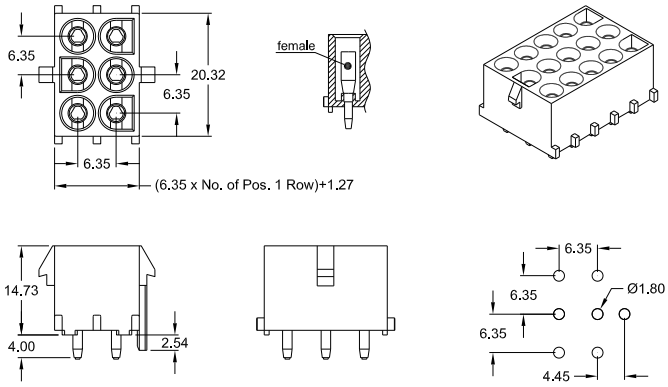

Order Code: PCS-3xx-PF635-99/X

-THT- Male straight *(top entry)*

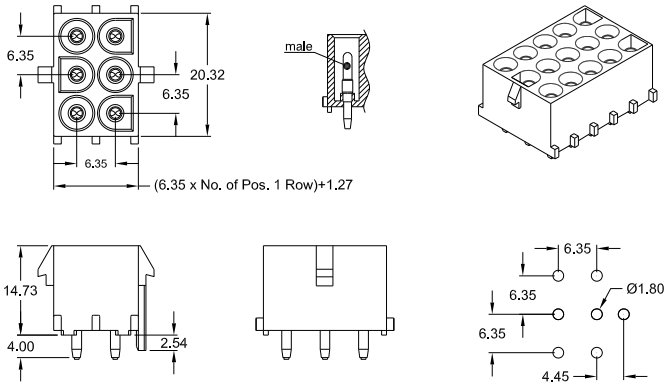

Order Code: PCS-3xx-PM635-99/X

Specifications

Current rating	11 A	Voltage rating	600 V AC max.	Contact material	Copper Alloy
Insulation resistance	1000 MΩ min.	Withstanding voltage	1000 V AC	Insulator material	PA66 UL 94V-0 & V-2
Contact resistance	20 mΩ max.	Operating temperature	-55°C to +105°C	PCB thickness	1.60mm

How to order

PC X - x xx - X 635 - 99 / X

Type	Rows	Nbr of Contacts	Execution	Plating	Color Option
C = Clutch **F** = Female **M** = Male **S** = Straight	**3** = triple row *if Crimp Contact:* **9**	P, PF & PM – Execution: **06, 09, 12 & 15** *if Crimp Contact:* **99/10** = for AWG 12~14 **99/16** = for AWG 16~20 **99/19** = for AWG 18~22	**P** = P - Type **PM** = P - Type male **PF** = P - Type female for details see above dwg's	**99** = Tin *(leadfree)* other platings on request	**N** = nature (UL 94V-2) **W** = white (UL 94V-0) PF & PM Execution if polarizing is requested: **NP** = nature (UL 94V-2) **WP** = white (UL 94V-0)

Other products from E-tec

Please contact your closest sales office for further information.

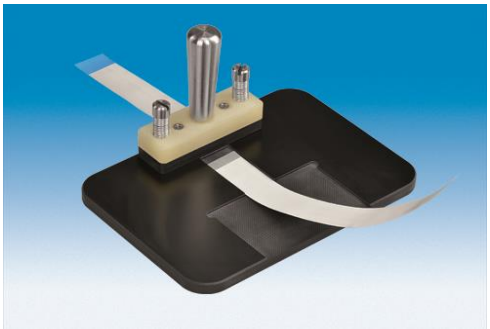

Flex Cable Test Units

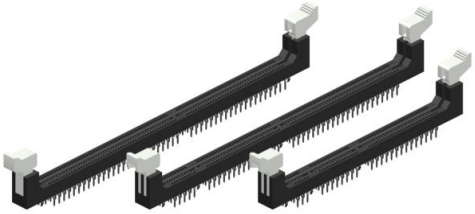

DIMM Sockets

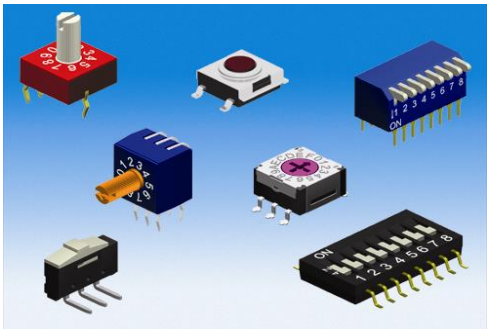

DIP Switch

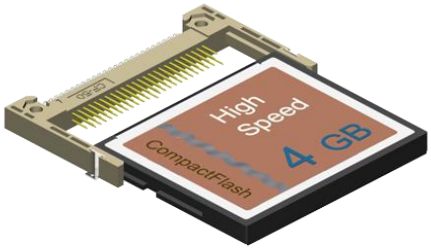

Compact Flash Connector

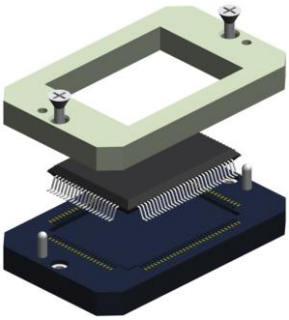

Gullwing Chip Sockets

USB & IEEE 1394 Connectors

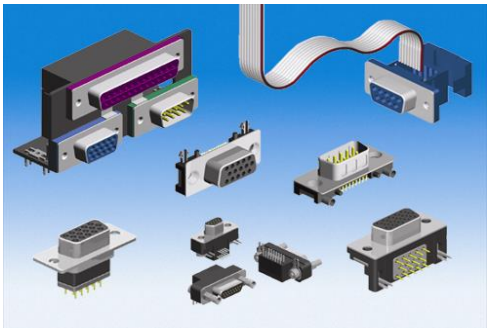

D-Sub Connectors

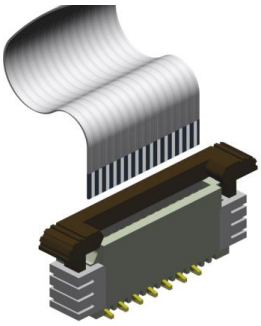

Flex Cable Connectors

HDMI Connectors

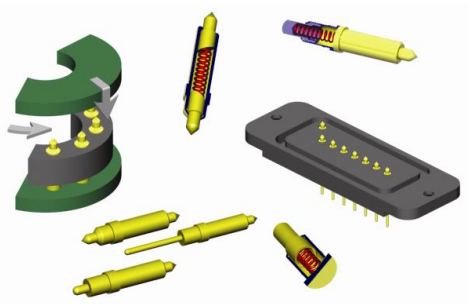

Probe Pin & Probe Pin Connectors

Test Sockets & Adapters

Multi Media Card Connectors

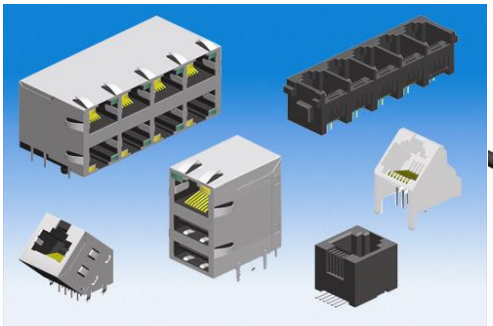

Modular Plugs & Jacks

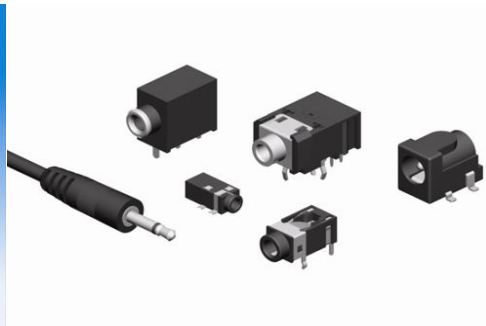

Phono - & DC - Power Connectors

RF - Connectors

The E-tec Group

For over 40 years E-tec have manufactured and supplied a diverse range of electronic interconnect solutions across the global market. Our portfolio has grown with our customers, to include Test Sockets, IC sockets, PCB interconnect products, D-Subs, Switches, RF connectors and cable assemblies. We design, develop, produce and provide sales and support directly to our customers. With production facilities in Switzerland, Taiwan, UK and China, we offer flexible capacity with short delivery times from prototype to large volume production series. In this way, E-tec are ideally positioned to provide a genuinely global service, from product conception to production, wherever and whenever our customers require it.

E-tec connectors, cables, sockets and specials are found in the most demanding of application fields, including; aerospace, automotive, communications, defence, medical, pumping and vacuum, sensor and safety equipment, transportation and much more. At E-tec, our experienced team understand uncompromising quality and dedicated service are the foundations of successful project delivery. We are ISO9001 certified, and many products are UL listed and TS16949 accredited to meet exacting industry standards. We welcome your enquiries, please contact us or visit our website and we will respond promptly.

International Sales Office & Factory

E-tec Interconnect AG

Friedhofstrasse 1
CH-2543 Lengnau b. Biel
Switzerland

Phone: +41 (0) 32 654 15 50
Fax: +41 (0) 32 652 26 93
Email: info@e-tec.com
Web: www.e-tec.com

Taiwan Sales Office & Factory

E-tec Interconnect Asia Ltd

7F, No. 69, Sec 2, Guangfu Rd.
Sanchong Dist., New Taipei City
24158 Taiwan R.O.C.

Phone: +886 / 2 / 2999-2726
Fax: +886 / 2 / 2999-5255
Email: info@e-tec-asia.com.tw
Web: www.e-tec.asia

Germany Sales Office

EMC
electro mechanical components GmbH

Deningerstrasse 4a
D-65510 Idstein

Phone: +49 (0) 6126 / 9 395-0
Fax: +49 (0) 6126 / 9 395-72
Email: info@emc.de
Web: www.emc.de

United Kingdom Sales Office

E-tec Interconnect UK Ltd
Units 5-7 Decimus Park

Kingstanding Way
Tunbridge Wells
Kent TN2 3GP

Phone: +44 (0) 1892 / 530 260
Fax: +44 (0) 1892 / 515 560
Email: info@e-tec.co.uk
Web: www.e-tec.co.uk

France Sales Office

STELIAU Technology

41-43 rue Périer
92120 Montrouge

Phone: +33 (0) 1 / 55 58 04 04
Fax: +33 (0) 1 / 55 58 04 00
Email: contact@steliau-technology.com
Web: www.steliau-technology.com

Your Distributor / Representative

© E-tec & EMC 2020-E01